AUTOMOTIVE LIGHTING MANUFACTURER

2022

Fristom

VEHICLE LIGHTING MANUFACTURER

PRODUCT CATALOGUE

... all you need is light

www.fristom.com

... all you need is light

FRISTOM Spółka z o.o. Sp. k. is a Company with family traditions, dealing with the production of lighting and electrical harnesses for the Automotive industry. The beginnings of the Company date back to the previous generation, and under the present name **"FRISTOM Spółka z o.o. Sp. k."** it has been present on the market since **1995.** Through the years we have been constantly improving the quality of our products, and expanding our portfolio and sales range. All the activities we undertake are performed with passion. Our main goal is to provide comprehensive service, and ensure customer satisfaction, by designing, manufacturing, and marketing, the highest-quality lamps. Our products are successfully used in heavy transport, logistics, forwarding, agriculture, and private vehicles. Our main customers are wholesalers and distribution networks, as well as trailer and semi-trailer manufacturers in this country and abroad. The machines and equipment we use are **the absolute best in the Automotive industry**. There is no cutting corners with us, and **we treat each product exceptionally** – it will one day reach the end user, who must be satisfied with it. Therefore, we use not only the best materials, but also the most perfect and modern machines in their production. They provide not only **excellent quality** but also **reliability in the manufactured products**. In order to completely eliminate errors and damage, to increase the efficiency, and therefore the competitiveness, of our Company, we constantly rely on full automation of production.

It is thanks to all this that we deliver excellent and reliable products. The quality of our products and work is confirmed by the ISO 9001:2015 certificate

QUALITY & RELIABILITY POLSKA ISO 9001

UCA unidad de certificación DEL AUTOMÓVIL

Nowadays, climate care and gradually depleting energy sources have become a great challenge for us. Let's start with ourselves - this is very simple. One way is to use LED technology. This is one of the easiest things we can do for the environment. So, what are the characteristic features of modern LED lighting?

- energy efficiency – consumes 85% less energy than a conventional light bulb
- longer service life – operating times range from 60,000 to 80,000 hours (thanks to such a long service life we reduce the production of so-called electro-waste)
- increased visibility – thanks to this we can reduce the number of street lamps - the lighting from our vehicle is enough
- significant reduction in CO_2 production – LED lighting does not generate heat at all; moreover, substances such as mercury are not used in its production
- simpler and cheaper disposal.

Next time you buy lighting equipment, think about whether you want to help our planet.

... all you need is light

Fristom

GLOBAL PRESENCE
FRISTOM is present in key markets all around the world, with multiple distribution points.

ANGOLA
AUSTRALIA
AUSTRIA
BELARUS
BELGIUM
BOSNIA AND HERZEGOVINA
BRAZIL
BULGARIA
CHINA
CROATIA
CYPRUS
CZECH REPUBLIC
DENMARK
ESTONIA
FINLAND
FRANCE
GERMANY
GREECE
HUNGARY
INDIA
IRELAND
ISRAEL
ITALY
JORDAN
KAZAKHSTAN
KOREA, DEMOCRATIC PEOPLE'S REPUBLIC OF
LATVIA
LIBYA
LITHUANIA
LUXEMBOURG
MALTA
MEXICO
MOLDOVA
MOROCCO
NETHERLANDS
NEW ZEALAND
NORWAY
POLAND
PORTUGAL
ROMANIA
RUSSIA
SERBIA AND MONTENEGRO
SLOVAKIA
SLOVENIA
SOUTH AFRICA
SPAIN
SWEDEN
SWITZERLAND
TURKEY
UKRAINE
UNITED KINGDOM
UNITED STATES OF AMERICA

CONTENTS

LED WARNING LIGHTS	12 – 23
LED WORK LAMPS	24 – 35
LED DAYTIME RUNNING LAMPS	36 – 37
LED REAR LAMPS	38 – 73
REAR LAMPS **BULB VERSION**	74 – 83
LED THIRD BREAK LIGHT (STOP)	84 – 85
LED CLEARANCE LAMPS	86 – 141
CLEARANCE LAMPS **BULB VERSION**	142 – 144
LED REVERSING LAMPS	144 – 150
REVERSING LAMPS **BULB VERSION**	151
LED FOG LAMPS	152 – 157
FOG LAMPS **BULB VERSION**	158
LED NUMBER PLATE LIGHT	159 –165
NUMBER PLATE LIGHT **BULB VERSION**	166
LED INTERIOR LIGHTING	167 – 174
LED INDICATORS / INDICATORS **BULB VERSION**	174 – 177
REFLECTORS	178 – 183
ACCESSORIES	184 – 189

SIGN EXPLANATION

Sidelight	Indicator	Number plate light
Fog light	Stop light	LED diode light source
Reversing light	Clearance light	Reflector

ATTENTION!
Please send your orders by e-mail at
bstaniaszek@fristom.com.pl, wtomczak@fristom.com.pl, rcardona@fristom.com.pl, mjanus@fristom.com.pl
For further information concerning our order policy see **"About us"** bookmark on our website.

• NEW • NEW • NEW • NEW • NEW • NEW • NEW • NEW • NEW • NEW • NEW • NEW • NEW •

Fristom Fristom

LED WARNING Lights

Yellow light warning lights are intended for garbage trucks, roadside assistance, slurry trucks, combine harvesters, agricultural tractors, road rollers.
Blue beacons are mandatory equipment of emergency vehicles, such as ambulances, police cars, fire engines or prisoner transport vehicles.

E 9 IP 68 EMC

VIDEO WWW

FT-210 LED

FT-210 N LED

Directional **XA1** warning light lamps are equipped with 3 pcs of **OSRAM's** extremely efficient LEDs. Thanks to the lamp's double lens system, the light emitted by the diodes is focused and pointed in the correct direction. Thanks to this, the light signal will be visible even during difficult weather conditions, at night or during the day. The task of the FRISTOM warning lamp is, above all, to improve road safety, which is why the lamp's efficiency is at an unprecedented level. The lamp makes use of several fully approved warning flashes, which can be changed in a simple and user-friendly way. In addition, all lamps in the FT-210 series are equipped with two groups of synchronisation, so that the light signals emitted by the vehicle are organised and friendly to the observer. ***The synchronisation system is compatible with the FT-200 series lamps, which allows them to be connected together.***

The lamp housing is made of impact-resistant material, and in combination with a lampshade made of polycarbonate (**PC**) creates a product that is extremely durable and resistant to mechanical damage, shocks, as well as moisture, all certified with appropriate certificates. The high reliability, modern shape and compact design of the lamp make this product widely used in modern special-purpose vehicles, e.g. for transporting large-size loads, vehicles participating in repairs and road construction, road assistance, as well as in refuse collection vehicles.

TECHNICAL SPECIFICATION:
- 3 LED **OSRAM** diodes
- supply voltage: **12–36V DC**
- **Power consumption: 12V/24V/ Peak power consumption: 0.3A/0.15A**
- **Rated power: (Peak) = 4 W**
- **ECE no.65 (XA1)** lamps homologation
- Flash frequency: **f = 2.0 Hz** (single, double, triple flash)
- **EMC R10** Certificate
- fully waterproof **(IP68)**
- shock resistance - **IK**
- Operating temperature: **–40 °C** to **+55 °C**
- reverse polarity protection system
- **GROUND** – white wire; **PLUS** – black wire
  SYNCHRONIZATION – yellow wire

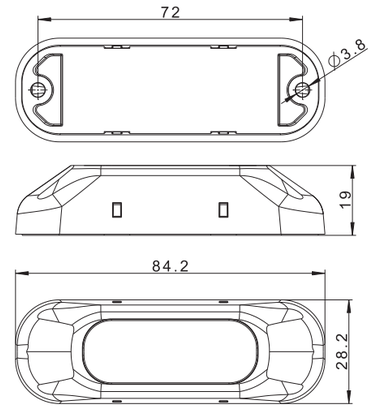

ID/EAN	Photo	Description	Unit pack		Multipack / carton			Multipack / pallet		
			qty.	kg	qty.	cm	kg	qty.	cm	kg
FT-210 LED 5907556013872		Yellow LED warning beacon, cable's length 0.25 m.	1	0.048	550	59x39x29	26.40	11000	120x80x165	553.00
FT-210 N LED 5907556016323		Blue LED warning beacon, cable's length 0.25 m.	1	0.048	550	59x39x29	26.40	11000	120x80x165	553.00

VIDEO

WWW

E 9 IP 68 EMC

Category XB1 directional lamps generating emergency light have been fitted with 6 extraordinarily efficient **OSRAM** LEDs. Owing to the double lens system implemented in the lamp, the light emitted by the diodes is focused and cast in the right direction. The light signal will therefore be noticed even in dire weather conditions, both during the day and at night. Luminous efficacy of the lamp is at a level never seen before. The lamp emits a few fully certified light flashes that are easily customisable in a user–friendly manner. Additionally, all FT-200N lamps are equipped with two synchronisation groups that render the light signals emitted by the vehicle structured and easy on passers–by.
The lamp housing, made of an impact–resistant material, has been combined with a lampshade made of polycarbonate (**PC**) to create a product that is extremely durable and resistant to mechanical damage, shocks as well as moisture, all of which is attested by relevant certificates.
High reliability, modern shape, and compact design of the lamp make this product widely used in a variety of present–day emergency vehicles, e.g. ambulances, financial law enforcement vans, or tankers of sanitisation companies.

Technical specifications:
- 6 **OSRAM** LEDs
- Operating voltage range **12–36V DC**
- **Power consumption: 12V/24V/**
  Peak power consumption: 0.6A/0.3A
- Rated power: Peak = **8 watts**
- Homologation of warning lamps **ECE no. 65 (XB1)**
- Flash frequency: **f = 2Hz** (single, double, triple flash)
- Certificate of electromagnetic compatibility – **(EMC)**
- Fully waterproof lamp – **IP68**
- Shock–resistant lamp – **IK**
- Optimal lamp operating temperature: **–40°C** to **+55°C**
- The lamp has a reverse polarity protection system

Ground – white wire; **PLUS** – black wire;
Synchronisation/programme change – yellow wire

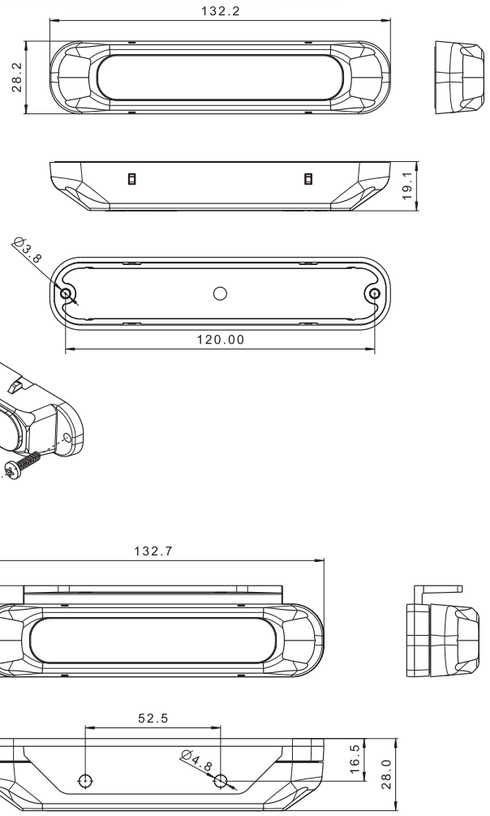

LED

ID/EAN	Photo	Description	Unit pack		Multipack / carton			Multipack / pallet		
			qty.	kg	qty.	cm	kg	qty.	cm	kg
FT-200 N LED 5907556012752		Blue LED warning beacon, cable's length 1 m.	1	0.138	144	59x39x29	19.87	2880	120x80x165	422.44

VIDEO

WWW

E 9 IP 68 EMC

Our new LED warning lamp **FT-200 LED** has been equipped with **6 pcs** of extremely efficient **OSRAM diodes**. Due to implementation of the double lens system the lamp generates focussed light in a proper direction. The light signal could be easily perceived in a very hard weather conditions both at night and during the day. Most of all, the major goal of the FT-200 LED lamp is to improve the road safety. The lamp is equipped with **6 different flashing programmes** which are easily customizable. The lamp housing is shock-resistant and in combination with **PC** lampshade becomes one of the most durable product on the market what is attested by several certificates.

Widespread application:
- Bulky loads transportation
- Roadside assistance services
- Security services

Technical specification:
- 6 x **OSRAM** diodes
- universal supply voltage – from **12V up to 36V DC**
- **power consumption: 12V/24V/**
  Peak power consumption 0.6A/1=0.3A
- rated power (peak): **8 W**
- **ECE no.65 (XA1)** lamps homologation
- flash frequency: **f = 2.0 Hz (single, double, triple flash)**
- ElectroMagnetic Compatibility – **EMC** certificate
- fully waterproof **(IP68)**
- operating temperature: **–40°C** to **+ 55°C**
- reverse polarity protection system:
- **GROUND** – white wire; **PLUS** – black wire
  SYNCHRONIZATION – yellow wire
- Different holder assembly possibility
- 6 programes
- Modern design
- Yellow light
- Different lamps synchronization possibility

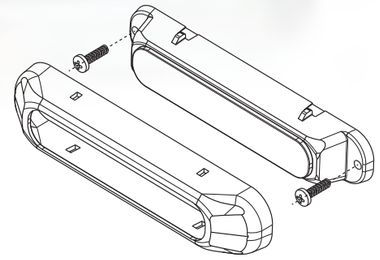

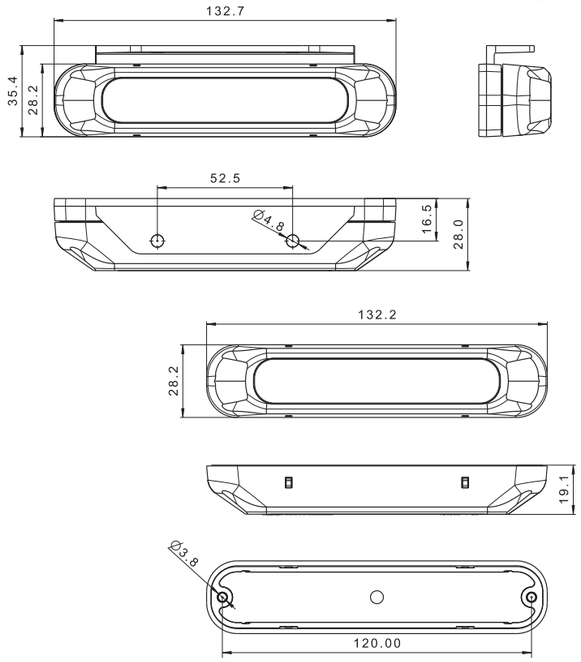

LED

ID/EAN	Photo	Description	Unit pack		Multipack / carton			Multipack / pallet		
			qty.	kg	qty.	cm	kg	qty.	cm	kg
FT-200 LED 5907556012516		Yellow LED warning lamp 12-36V with a 1 m wire.	1	0.138	144	59x39x29	19.87	2880	120x80x165	422.44

E 9
EMC
IP 68
ECE R65 TA1

WWW

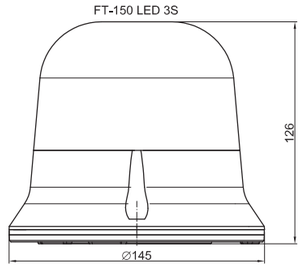

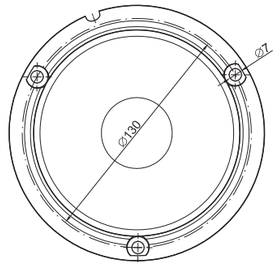

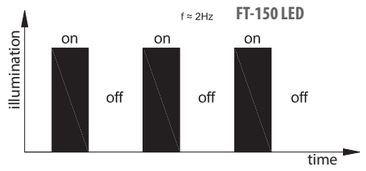

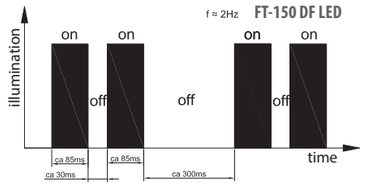

The new series of universal **LED** warning lamps **FT-150 LED** is equipped with 9 highly efficient **CREE** LED's that bring outstanding lighting parameters. It influences significantly on the safety on the road. The housing and other lamp parts are made of top quality materials (**PC** - polycarbonates) and electronic components highly resistant to both high and low temperatures, mechanical damages and vibrations. High operational reliability, modern design and compact structure make the product popular in the modern, special use vehicles.

Technical specification:
- Application of 9 **CREE** LED diodes
- Universal supply votlage **12–36V**
- Peak power consumption: **1,2A/0,6A/0,32A**, average power consumption: **0,5A/0,25A/0,13A**
- Peak/average rated power: **15W/6W**
- Special warning lamp approval compliant with **ECE** Regulation 65 (TA1)
- Flash frequency: **f = 2,0 Hz** (single flash)
- Full waterproofness **(IP68)**
- Shock-resistance – **IK**
- ElectroMagnetic Compatibility – **EMC** certificate
- Operating temperature **–40°C** to **+55°C**
- Reverse polarity protection
- **Ground** (-) white wire; **Plus** (+) black wire

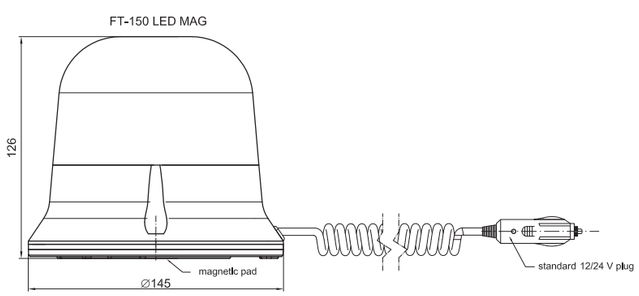

The new series of universal **LED** warning lamps **FT-150 LED** is equipped with 9 highly efficient **CREE** LED's that bring outstanding lighting parameters. It influences significantly on the safety on the road. The housing and other lamp parts are made of top quality materials (PC - polycarbonates) and electronic components highly resistant to both high and low temperatures, mechanical damages and vibrations. High operational reliability, modern design and compact structure make the product popular in the modern, special use vehicles.

Technical specification:
- Application of 9 **CREE** LED diodes
- Universal supply votlage **12–36V**
- Peak power consumption: **1.2A/0.6A/0.32A**, average power consumption: **0.5A/0.25A/0.13A**
- Peak/average rated power: **15W/6W**
- Special warning lamp approval compliant with **ECE** Regulation 65 (TA1)
- Flash frequency: **f = 2,0 Hz** (double flash)
- Full waterproofness **(IP68)**
- Shock-resistance – **IK**
- ElectroMagnetic Compatibility – **EMC** certificate
- Operating temperature **–40°C** to **+55°C**
- Reverse polarity protection
- **Ground** (-) white wire; **Plus** (+) black wire

E 9
IP 68
EMC
ECE R65 TA1

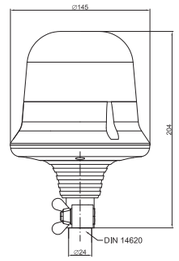

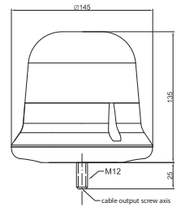

ID/EAN	Photo	Description	Unit pack		Multipack / carton			Multipack / pallet		
			qty.	kg	qty.	cm	kg	qty.	cm	kg
FT-150 3S LED 5907556004641		Yellow LED warning beacon, mounted on 3 screws. Cable's length 1.5 m.	1	0.72	12	59x39x33	8.64	240	120x80x165	197.80
FT-150 LED MAG M30 5907556004115		Yellow LED warning beacon mounted on a magnet. Additionally, the lamp is equipped with a spiral cable (unfolded – 3 m, in spiral – 0.6 m) and a standard 12/ 24V lighter plug.	1	1.22	12	59x39x33	14.64	240	120x80x165	317.80
FT-150 LED MAG M78 5907556004146		Yellow LED warning beacon mounted on a magnet. Additionally, the lamp is equipped with a spiral cable (unfolded – 7.8 m, in spiral – 1.2 m) and a standard 12/ 24V lighter plug.	1	1.42	12	59x39x33	17.04	240	120x80x165	365.80
FT-150 3S DF LED 5907556004665		Yellow LED warning beacon, double flash, mounted on 3 screws, cable's length 1.5 m.	1	0.72	12	59x39x33	8.64	240	120x80x165	197.80
FT-150 DF LED MAG M30 5907556004139		Yellow LED warning beacon, double flash, portable version mounted on a magnet. The lamp is equipped with a spiral cable (unfolded – 3 m, in spiral – 0.6 m) and a standard 12/ 24V lighter plug.	1	1.22	12	59x39x33	14.64	240	120x80x165	317.80
FT-150 DF LED MAG M78 5907556004634		Yellow LED warning beacon, double flash, portable version mounted on a magnet. The lamp is equipped with a spiral cable (unfolded – 7.8 m, in spiral – 1.2 m) and a standard 12/ 24V lighter plug.	1	1.42	12	59x39x33	17.04	240	120x80x165	365.80
FT-150 LED PI 5907556000490		Yellow LED warning beacon, single flash. The lamp appears in a stationary LED 12-55V version with a pipe-socket and electrical connector type PLUG-IN (DIN 14620).	1	0.80	12	59x39x33	9.60	240	120x80x165	192.00
FT-150 DF LED PI 5907556000513		Yellow LED warning beacon, double flash. The lamp appears in a stationary LED 12-55V version with a pipe-socket and electrical connector type PLUG-IN (DIN 14620).	1	0.80	12	59x39x33	9.60	240	120x80x165	192.00
FT-150 SC LED 5907556010543		Yellow LED warning beacon, single flash. The lamp appears in a stationary LED 12-55V version with a single bolt and a loom.	1	0.72	12	59x39x33	8.64	240	120x80x165	197.80
FT-150 SC DF LED 5907556010550		Yellow LED warning beacon, double flash. The lamp appears in a stationary LED 12-55V version with a single bolt and a loom.	1	0.72	12	59x39x33	8.64	240	120x80x165	197.80

FT-150 DF 3S N LED

FT-150 DF N LED PI

The new series of universal **LED** warning lamps is equipped with 9 highly efficient **CREE** LED's that bring outstanding lighting parameters. It influences significantly on the safety on the road. The housing and other lamp parts are made of top quality materials (**PC** - polycarbonates) and electronic components highly resistant to both high and low temperatures, mechanical damages and vibrations. High operational reliability and compact structure make the product popular in the modern, special use vehicles.

Technical specification:
- Application of 9 **CREE** LED diodes
- Universal supply votlage **12–36V**
- Peak power consumption: **1.2A/0.6A/0.32A**, average power consumption: **0.5A/0.25A/0.13A**
- Peak/average rated power: **15W/6W**
- Special warning lamp approval compliant with ECE Regulation 65 (TB1)
- Flash frequency: **f = 2.0 Hz** (double flash)
- Full waterproofness
- Shock-resistance
- ElectroMagnetic Compatibility – **EMC** certificate
- Operating temperature **–40°C** to **+55°C**
- Reverse polarity protection
- **Ground** (-) white wire; **Plus** (+) black wire

FT-150 DF N LED MAG M30
FT-150 DF N LED MAG M78

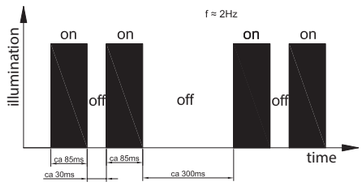

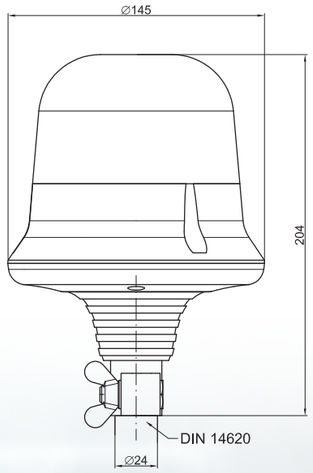

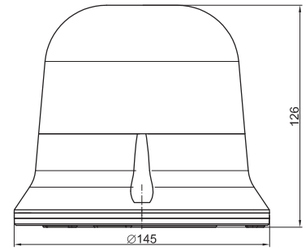

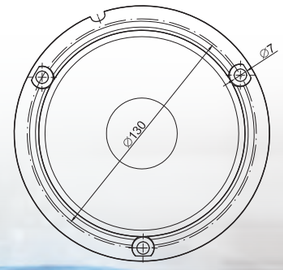

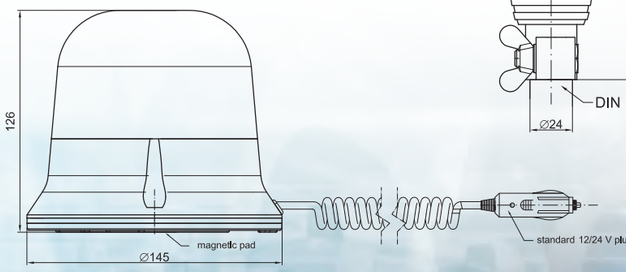

ID/EAN	Photo	Description	Unit pack		Multipack / carton			Multipack / pallet		
			qty.	kg	qty.	cm	kg	qty.	cm	kg
FT-150 3S DF N LED 5907556015821		Blue LED warning beacon, double flash, mounted on 3 screws, cable's length 1.5 m.	1	0.72	12	59x39x33	8.64	240	120x80x165	197.80
FT-150 DF N LED MAG M30 5907556015838		Blue LED warning beacon, double flash, portable version mounted on a magnet. The lamp is equipped with a spiral cable max 3 m.	1	1.22	12	59x39x33	14.64	240	120x80x165	317.80
FT-150 DF N LED MAG M78 5907556015845		Blue LED warning beacon, double flash, portable version mounted on a magnet. The lamp is equipped with a spiral cable max 7.8 m.	1	1.42	12	59x39x33	17.04	240	120x80x165	365.80
FT-150 DF N LED PI 5907556015852		Blue LED warning beacon, double flash. The lamp appears in a stationary LED 12-55V version with a pipe-socket and electrical connector type PLUG-IN.	1	0.80	12	59x39x33	9.60	240	120x80x165	192.00

E 9 | EMC | IP 68 | ECE R65 TA1

VIDEO | WWW

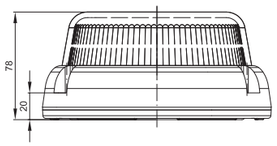

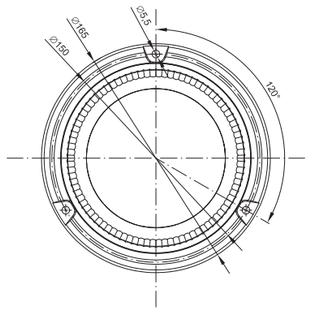

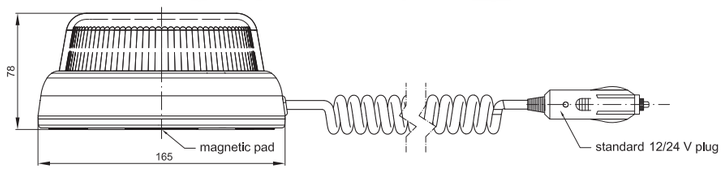

Series of warning lamps **FT-101 LED** is equipped with 20 highly efficient **CREE** diodes that considerably influence on optimall targeted beam of light visible even under severe weather conditions. The body is made of impact-resistant material and along with the lampshade made of polycarbonate (**PC**) forms an extremely solid and resistant to mechanical damage, moisture and shock product that is confirmed with the relevant certificate. High reliability, modern shape and compact design go perfectly with the modern special-purpose vehicles.

FT-101 LED / FT-101 LED DF
Technical specifiaction
- universal supply votlage: **12 – 36V DC**
- **Power consumption: 12V/24V/**
  Peak power consumption: 1.5A/0.8A
- Peak/average rated power: **12V/24V – 18W/20W**
- special warning lamp approval compliant with **ECE Regulation 65 (TA1)**
- flash frequency: **f = 2Hz**
- lectroMagnetic Compatibility – **EMC** certificate
- full waterproofness **(IP68)**
- shock-resistance – **IK**
- operating temperature: **–40°C** to **+ 55°C**
- reverse polarity protection system
- fixed polarisation: **GROUND** – white wire; **(+)** – black wire

FT-101 RO LED
Technical specifiaction:
- universal supply votlage: **12 – 36V DC**
- **Power consumption: 12V/24V/**
  Peak power consumption: 0.5A/0.25A
- Peak/average rated power: **12V/24V – 6W/6W**
- special warning lamp approval compliant with **ECE Regulation 65 (TA1)**
- flash frequency: **f = 2Hz**
- lectroMagnetic Compatibility – **EMC** certificate
- full waterproofness **(IP68)**
- shock-resistance – **IK**
- operating temperature: **–40°C** to **+ 55°C**
- reverse polarity protection system
- fixed polarisation: **GROUND** – white wire; **(+)** – black wire

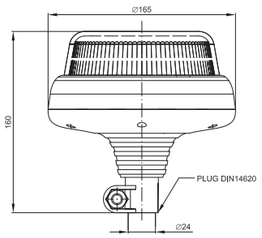

ID/EAN	Photo	Description	Unit pack qty.	Unit pack kg	Multipack / carton qty.	Multipack / carton cm	Multipack / carton kg	Multipack / pallet qty.	Multipack / pallet cm	Multipack / pallet kg
FT-101 3S DF LED 5907556017597		Yellow LED warning beacon, double flash, mounted on 3 screws, cable's length 1.5 m.	1			59x39x29			120x80x165	
FT-101 DF LED MAG M30 5907556017603		Yellow LED warning beacon, double flash, portable version mounted on a magnet pad. The lamp is equipped with a spiral cable (unfolded - 3 m, in spiral - 0.6 m) and a standard 12/ 24V lighter plug.	1			59x39x29			120x80x165	
FT-101 DF LED MAG M78 5907556017610		Yellow LED warning beacon, double flash, portable version mounted on a magnet pad. The lamp is equipped with a spiral cable (unfolded - 7,8m, in spiral - 1,2 m) and a standard 12/ 24V lighter plug.	1			59x39x29			120x80x165	
FT-101 DF LED PI 5907556017627		Yellow LED warning beacon, double flash. The lamp appears in a stationary version with a pipe-socket.	1			59x39x29			120x80x165	
FT-101 SC DF LED 5907556018044		Yellow LED warning beacon, double flash, mounted on central screw, version with a single bolt and a loom.	1			59x39x29			120x80x165	
FT-101 3S RO LED 5907556017634		Yellow LED warning beacon, **rotation flash**, mounted on 3 screws, cable's length 1.5 m.	1			59x39x29			120x80x165	
FT-101 RO LED MAG M30 5907556017641		Yellow LED warning beacon, **rotation flash**, portable version mounted on a magnet pad. The lamp is equipped with a spiral cable (unfolded - 3 m, in spiral - 0.6 m) and a standard 12/ 24V lighter plug.	1			59x39x29			120x80x165	
FT-101 RO LED MAG M78 5907556017658		Yellow LED warning beacon, **rotation flash**, portable version mounted on a magnet pad. The lamp is equipped with a spiral cable (unfolded - 7.8m, in spiral - 1.2m) and a standard 12/ 24V lighter plug.	1			59x39x29			120x80x165	
FT-101 RO LED PI 5907556017665		Yellow LED warning beacon, **rotation flash**. The lamp appears in a stationary version with a pipe-socket.	1			59x39x29			120x80x165	
FT-101 3S LED 5907556017672		Yellow LED warning beacon, single flash, mounted on 3 screws, cable's length 1.5 m.	1			59x39x29			120x80x165	
FT-101 LED MAG M30 5907556017689		Yellow LED warning beacon, single flash, portable version mounted on a magnet pad. The lamp is equipped with a spiral cable (unfolded - 3 m, in spiral - 0.6 m) and a standard 12/ 24V lighter plug.	1			59x39x29			120x80x165	
FT-101 LED MAG M78 5907556017696		Yellow LED warning beacon, single flash, portable version mounted on a magnet pad. The lamp is equipped with a spiral cable (unfolded - 7,8m, in spiral - 1,2m) and a standard 12/ 24V lighter plug.	1			59x39x29			120x80x165	
FT-101 LED PI 5907556017702		Yellow LED warning beacon, single flash. The lamp appears in a stationary version with a pipe-socket.	1			59x39x29			120x80x165	

MANUFACTURER OF LIGHTING AND CABLE HARNESSES

FRISTOM Spółka z o.o. Sp. k. is a Company with family traditions, dealing withproduction of lighting and electric harnesses for the automotive industry. The beginnings of the company's activitygo back to an earlier generation, and under the current name of **"FRISTOM Spółka z o.o. Sp. k."** has been operating on the market since **1995**.

Why FRISTOM?

You will receive comprehensive service with us. We will provide an cable harnesses, rear lamps, number plate lighting, marker lamps ..., all electrics that are necessary in 12V trailers. We are specialists in this field. All lamps are EMC certified authorizing the installation of our products on trailers. We have extensive technical knowledge thanks to which we will help you choose the right onelighting and cable harnesses in accordance with the regulations,adjusted to the length of the trailer. We have been trusted by many companies not only from Poland,but also from Europe.

A FAMILY COMPANY – A GLOBAL BRAND

LED WORK Lamps

All lamps in our offer are characterized
by the highest quality
– **they have a robust body and small dimensions**.
They are equipped
with extremely efficient LEDs of high light output.

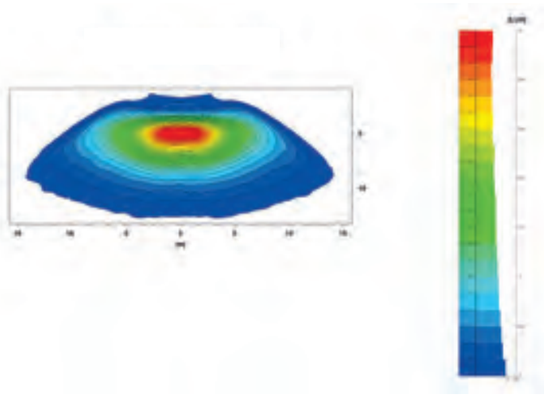

EMC IP 68

The new series of FRISTOM universal **LED** work lamps **FT-360 LED** and **FT-361 LED** is equipped with highly efficient LED diodes of **CREE**. Installed in an aluminum housing in order to create optimal working conditions that guarantee high and constant parameters of brightness, reliability and long-term durability of the product. These lamps have already found a very wide application in land and water transport, agriculture and construction. The housing and other lamp parts are made of top quality materials and electronic companents highly resistant to both high and low temperatures, mechanical damages and vibrations. The small dimensions of the lamp allow it to be mounted even in the most inaccessible locations.

FT-360 LED – wide lighting beam (illumination of close working area).
FT-361 LED – focused beam of light (illumination of the far working field).

Technical specification:
- Wide operating voltage range of **12–36V DC**
- **Power consumption: 12V/24V/48V = 3.2A/1.6A/0.8A**
- **Rated power: 38 W**
- Light color temperature about **5700K** (natural color, optimal to human eyes)
- Theoretical light beam **4100 lm** (Effective light beam **3500 lm**)
- Electromagnetic Compatibility Certificate – **EMC**
- Optimum work temperature: **–40°C** to **+35°C**
- **Ground** – white wire; **PLUS** – black wire

WARNING!
*The housing of the **FT-360 LED** and **FT-361 LED** lamps also functions as a thermal radiator and can therefore heat up significantly!*

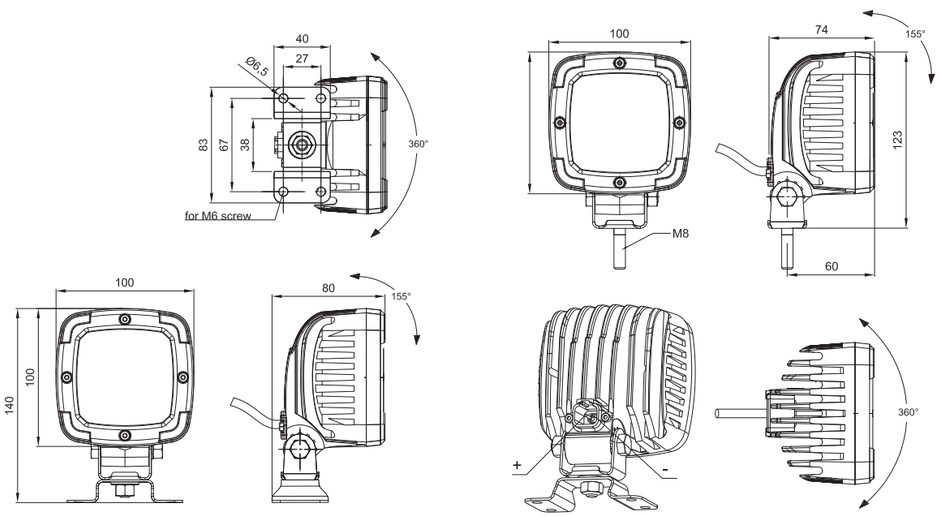

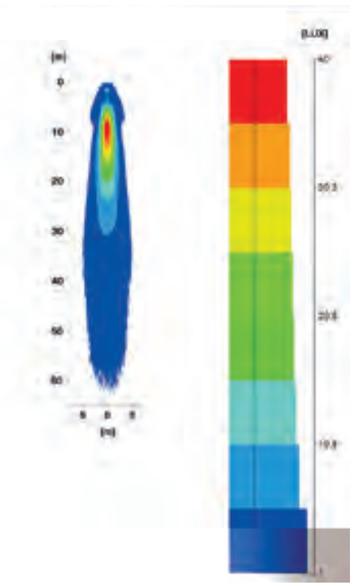

EMC IP 68

ID/EAN	Photo	Description	Unit pack		Multipack / carton			Multipack / pallet		
			qty.	kg	qty.	cm	kg	qty.	cm	kg
FT-360 LED 5907556015876		Universal LED work lamps, wide luminous flux, min. 4100 lm, black aluminium housing, red frame, joint holder, cable 1.5 m.	1	0.78	50	59x39x29	39.00	1000	120x80x165	805.00
FT-361 LED 5907556015913		Universal LED work lamps, focused light beam, min. 4100 lm, black aluminium housing, red frame, joint holder, cable 1.5 m.	1	0.78	50	59x39x29	39.00	1000	120x80x165	805.00
FT-036 RAM B 5907556008489		Removable frame for work lamps. White color.	5	0.10						
FT-036 RAM CZ 5907556008496		Removable frame for work lamps. Black color.	5	0.10						
FT-036 RAM C 5907556008502		Removable frame for work lamps. Red color.	5	0.10						
FT-036 RAM ZIEL 5907556008533		Removable frame for work lamps. Green color.	5	0.10						
FT-036 RAM SZ 5907556008519		Removable frame for work lamps. Grey color.	5	0.10						
FT-036 RAM Z 5907556008526		Removable frame for work lamps. Yellow color.	5	0.10						
FT-036 RAM MIX 5907556008700		Set of (6 pcs.) removable frames for work lamp, MIX - all colors.	6	0.12						
Uchwyt „OMEGA” 5907556006010		«OMEGA» mounting holder of KO metal sheet for work lamps.	10	0.60						
Uchwyt „OMEGA” INOX 5907556005600		«OMEGA» mounting holder of INOX metal sheet for work lamps.	10	0.45						

Omega holder is not included in the basic accessories of the lamps FT-360 LED and FT-361 LED.

VIDEO

WWW

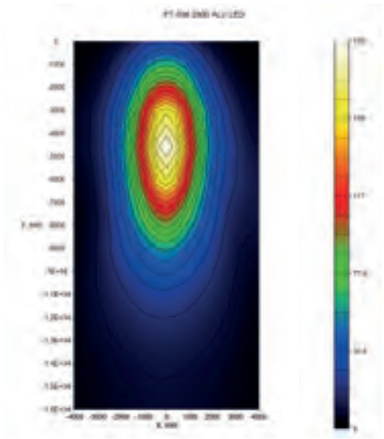

EMC

IP 68

The new series of universal **LED** work lamps **FT-036 LED ALU 2800** is equipped with higly efficient **CREE** LED's and an alluminium housing that brings outstanding lighting parameters. Fristom work lamps are widely used both in road and water transportation, agriculture, construction and water sports. They are characterised by relatively low power consumption. Rated power of **FT-036 LED ALU 2800** lamps fluctuate around **34W**! Small overall dimensions make possible to mount the lamps in the most inaccessible locations. The housing and other lamp parts are made of top quality materials and electronic components highly resistant to both high and low temperatures, mechanical damages and vibrations.

Technical specification:
- universal suply voltage – from **12V up to 36V DC**
- **power consumption: 12V/24V/48V = 2.8A/1.4A/0.7A**
- **rated power: 34W**
- color temperature: around **6.000K** (Kelvin)
- effective (measured) light beam – **min. 2.800 lm**
- lamp with an aluminium housing, 9 x **CREE** LED's
- ElectroMagnetic Compatibility – **EMC certificate**
- full waterproofness **(IP68)**
- shock-resistance – **IK**
- operating temperature: **–40°C** to **+55°C**
- reverse polarity protection system
- fixed polarisation: **GROUND** – white wire; **(+)** – black wire

WARNING!
*The aluminium housing of **FT-036 LED ALU 2800** work lamps also performs the function of the heat sink and may become very hot!*

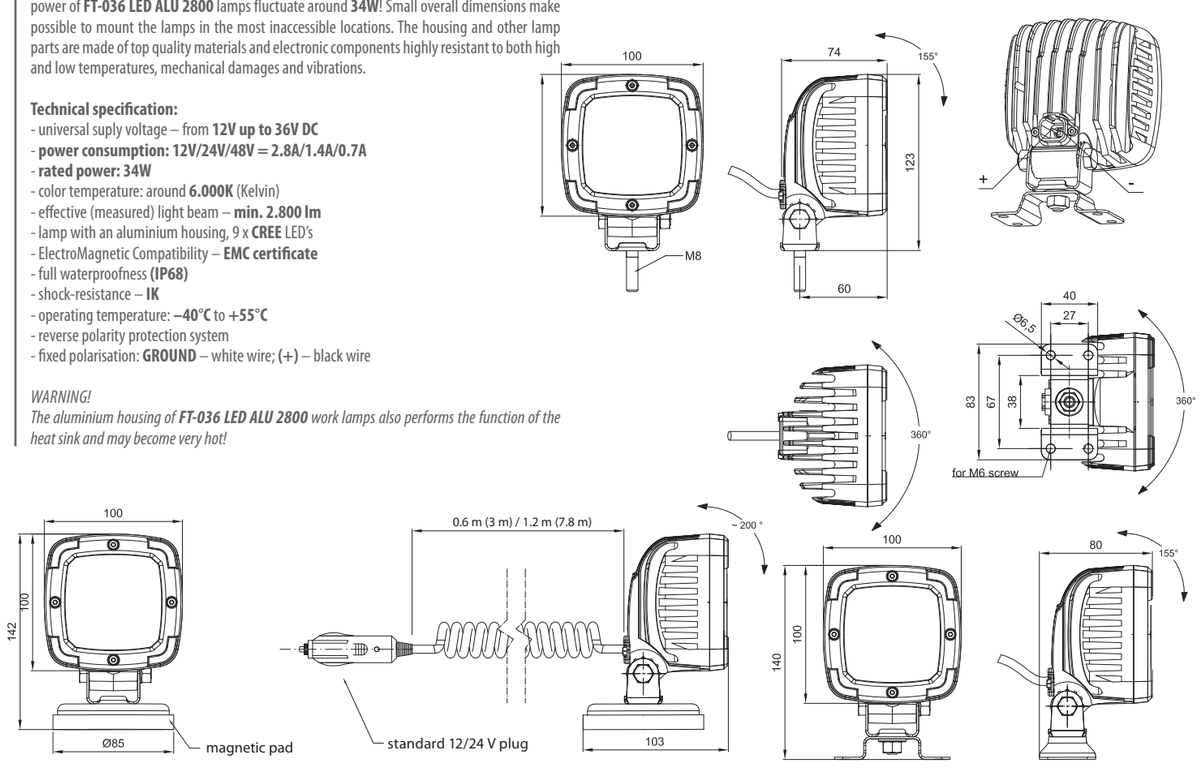

ID/EAN	Photo	Description	Unit pack		Multipack / carton			Multipack / pallet		
			qty.	kg	qty.	cm	kg	qty.	cm	kg
FT-036 LED ALU 2800 5907556008540		Universal LED work lamps, 9 diodes, min. 2800 lm, black aluminium housing, joint holder.	1	0.78	50	59x39x29	39.00	1000	120x80x165	805.00
FT-036 LED ALU 2800 MAG M30 5907556008564		Universal LED work lamps, 9 diodes, min. 2800 lm, black aluminium housing, magnetic pad, joint holder. The lamp is additionally equipped with a 3 m long spiral cable (0.6 m in spiral) with a standard 12/24V cigarette lighter plug.	1	1.35	22	59x39x29	29.70	440	120x80x165	619.00
FT-036 LED ALU 2800 MAG M78 5907556008571		Universal LED work lamps, 9 diodes, min. 2800 lm, black aluminium housing, magnetic pad, joint holder. The lamp is additionally equipped with a 7.8 m long spiral cable (1.2 m in spiral) with a standard 12/24V cigarette lighter plug.	1	1.55	22	59x39x29	34.10	440	120x80x165	707.00
FT-036 DS LED ALU 2800 5907556008786		Universal LED work lamps, min 2800 lm, 9 diodes, joint holder, black frame. The lamp is additionally equiped with DEUTSCH STECKER SOCKET built-in.	1	0.78	50	59x39x29	39.00	1000	120x80x165	805.00
FT-036 RAM B 5907556008489		Removable frame for FT-036 LED work lamps. White color.	5	0.10						
FT-036 RAM CZ 5907556008496		Removable frame for FT-036 LED work lamps. Black color.	5	0.10						
FT-036 RAM C 5907556008502		Removable frame for FT-036 LED work lamps. Red color.	5	0.10						
FT-036 RAM ZIEL 5907556008533		Removable frame for FT-036 LED work lamps. Green color.	5	0.10						
FT-036 RAM SZ 5907556008519		Removable frame for FT-036 LED work lamps. Grey color.	5	0.10						
FT-036 RAM Z 5907556008526		Removable frame for FT-036 LED work lamps. Yellow color.	5	0.10						
FT-036 RAM MIX 5907556008700		Set of (6 pcs.) removable frames for FT-036 work lamp, MIX - all colors.	6	0.12						
Uchwyt „OMEGA" 5907556006010		«OMEGA» mounting holder of KO metal sheet for FT-036 work lamps.	10	0.60						
Uchwyt „OMEGA" INOX 5907556005600		«OMEGA» mounting holder of INOX metal sheet for FT-036 work lamps.	10	0.45						
MAG FT-036 5907556007062		Magnetic pad for FT-036 work lamps with a rubber cover.	1	0.45						

Omega holder is not included in the basic accessories of the lamp FT-036 LED ALU 2800.

ADR

EMC

IP 68

VIDEO

WWW

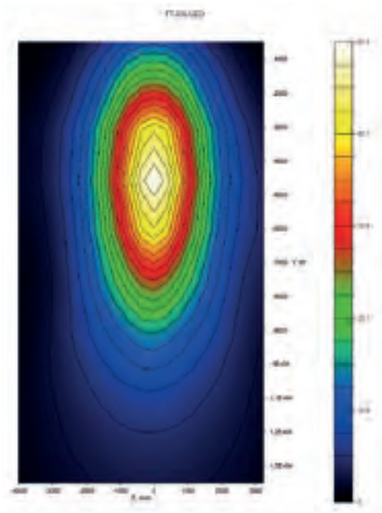

Series of universal **LED** work lamps **FT-036** is equipped with highly efficient LED diodes made by **OSRAM**. That process allowed us to obtain high light paramtres, about **1800 lm** for rated power consumption **13.5W**. Those lamps are widely used in both road and water transportation, agriculture, construction and in every sphere where severe atmospheric conditions occur including high humidity. The body is made of shock proof material and along with the lampshade made of polycarbonate (**PC**) form an extremely solid and resistant to mechanical damage, moisture and shock product that is confirmed with the relevant certificate. The small size allows the lamp to be placed in even the most inaccessible places.

Technical specification:
- universal supply votlage – **from 12V up to 36V DC**
- **power consumption: 12V/24V/48V = 1.1A/0.55A/0.28A**
- **rated power: 13.5W**
- color temperature: around **6.000K** (Kelvin)
- effective (measured) light beam – **1.800 lm**
  *(the minimum value is **1500 lm**, after 60 minutes of continuous use)*
- 9 x **OSRAM** LED's
- ElectroMagnetic Compatibility – **EMC certificate**
- full waterproofness **(IP68)**
- shock-resistance – **IK**
- operating temperature: **–40°C** to **+35°C**
- reverse polarity protection system
- fixed polarisation: **GROUND** - white wire; **(+)** - black wire

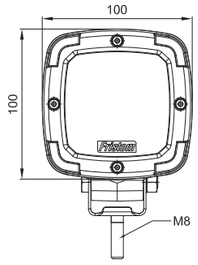

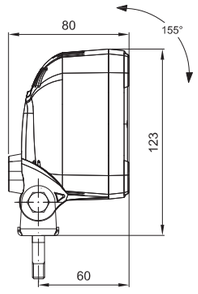

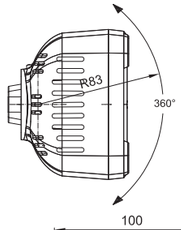

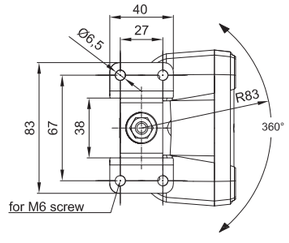

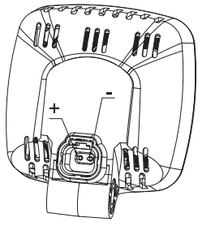

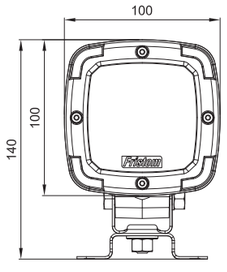

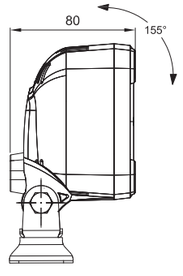

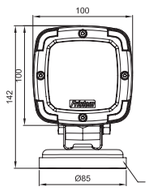

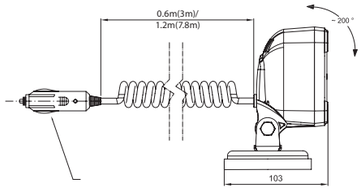

LED

ID/EAN	Photo	Description	Unit pack		Multipack / carton			Multipack / pallet		
			qty.	kg	qty.	cm	kg	qty.	cm	kg
FT-036 LED 5907556005617		Universal LED work lamps, joint holder, black colour casing. The lamp meets ADR requirements.	1	0.56	50	59x39x29	28.00	1000	120x80x165	585.00
FT-036 B LED 5907556005655		Universal LED work lamps, joint holder, white colour casing. Made by applying acid-resistant mounting elements. Designed especially for watercraft.	1	0.49	50	59x39x29	24.50	1000	120x80x165	515.00
FT-036 LED MAG M30 5907556005693		Universal LED work lamps, 9 diods, magnetic joint holder, black colour casing. The lamp is additionally equipped with a 3 m long spiral lead (in spiral 0.6 m) with a standard 12/24 V cigarette lighter socket plug.	1	1.10	22	59x39x29	24.20	440	120x80x165	509.00
FT-036 LED MAG M78 5907556005709		Universal LED work lamps, 9 diods, magnetic joint bracket, black colour casing. The lamp is additionally equipped with a 7.8 m long spiral lead (in spiral 1.2 m) with a standard 12/24 V cigarette lighter socket plug.	1	1.30	22	59x39x29	28.60	440	120x80x165	597.00
FT-036 DS LED 5907556007963		Universal LED work lamps 1800 lm, 9 diodes, joint holder, black colour housing with a Deutsch Stecker socket.	1	0,56	50	59x39x29	28.00	1000	120x80x165	585.00
FT-036 RAM B 5907556008489		Removable frame for FT-036 LED work lamps. White color.	5	0.10						
FT-036 RAM CZ 5907556008496		Removable frame for FT-036 LED work lamps. Black color.	5	0.10						
FT-036 RAM C 5907556008502		Removable frame for FT-036 LED work lamps. Red color.	5	0.10						
FT-036 RAM ZIEL 5907556008533		Removable frame for FT-036 LED work lamps. Green color.	5	0.10						
FT-036 RAM SZ 5907556008519		Removable frame for FT-036 LED work lamps. Grey color.	5	0.10						
FT-036 RAM Z 5907556008526		Removable frame for FT-036 LED work lamps. Yellow color.	5	0.10						
FT-036 RAM MIX 5907556008700		Set of (6 pcs.) removable frames for FT-036 work lamp, MIX - all colors.	6	0.12						
Uchwyt „OMEGA" 5907556006010		«OMEGA» mounting holder of KO metal sheet for FT-036 work lamps.	10	0.60						
Uchwyt „OMEGA" INOX 5907556005600		«OMEGA» mounting holder of INOX metal sheet for FT-036 work lamps.	10	0.45						
MAG FT-036 5907556007062		Magnetic pad for FT-036 work lamps with a rubber cover.	1	0.45						

Omega holder is not included in the basic accessories of the lamp FT-036 LED.

VIDEO

WWW

EMC

IP 68

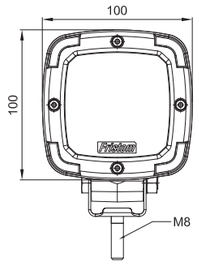

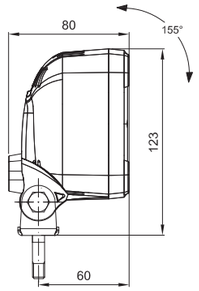

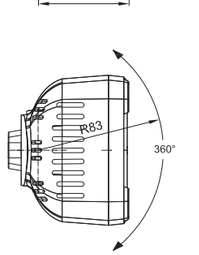

1-functional **LED** lamp - universal work field illumination
ElectroMagnetic Compatibility (**EMC**) homologation
Shock-resistance – **PC** lampshade
Optional polarity connection

Lamp functions:
- universal work field illumination

Lamp parameters:
- universal supply voltage – from **12V up to 36V DC**
- operating temperature: **–40°C** to **+55°C**
- effective (measured) light beam – **650 lm**
- lamp is resistant to any weather conditions
- lamp is fully airtight

Power consumption:
- 12V/24V = 0.5A/0.25A

Power consumption (rated power):
- 12V/24V = 6W/6W

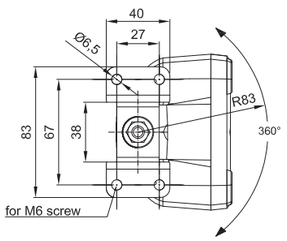

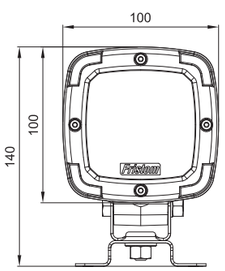

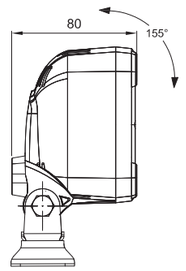

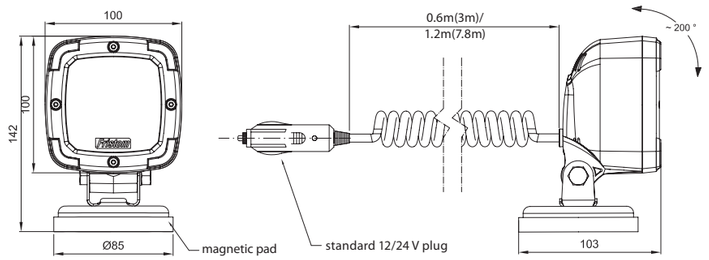

LED

ID/EAN	Photo	Description	Unit pack		Multipack / carton			Multipack / pallet		
			qty.	kg	qty.	cm	kg	qty.	cm	kg
FT-063 LED 5907556010192		Universal LED work lamps 650 lm, joint holder, black colour casing.	1	0.42	50	59x39x29	21.00	1000	120x80x165	445.00
FT-063 LED MAG M30 5907556010222		Universal LED work lamps 650 lm, 9 diods, magnetic joint holder, black colour casing. The lamp is additionally equipped with a 3 m long spiral lead (in spiral 0.6 m) with a standard 12/24 V cigarette lighter socket plug.	1	0.96	22	59x39x29	22.96	440	120x80x165	447.40
FT-063 LED MAG M78 5907556010239		Universal LED work lamps 650 lm, 9 diods, magnetic joint bracket, black colour casing. The lamp is additionally equipped with a 7.8 m long spiral lead (in spiral 1.2 m) with a standard 12/24 V cigarette lighter socket plug.	1	1.16	22	59x39x29	25.52	440	120x80x165	535.40
FT-036 RAM B 5907556008489		Removable frame for FT-036 LED work lamps. White color.	5	0.10						
FT-036 RAM CZ 5907556008496		Removable frame for FT-036 LED work lamps. Black color.	5	0.10						
FT-036 RAM C 5907556008502		Removable frame for FT-036 LED work lamps. Red color.	5	0.10						
FT-036 RAM ZIEL 5907556008533		Removable frame for FT-036 LED work lamps. Green color.	5	0.10						
FT-036 RAM SZ 5907556008519		Removable frame for FT-036 LED work lamps. Grey color.	5	0.10						
FT-036 RAM Z 5907556008526		Removable frame for FT-036 LED work lamps. Yellow color.	5	0.10						
FT-036 RAM MIX 5907556008700		Set of (6 pcs.) removable frames for FT-036 work lamp, MIX - all colors.	6	0.12						
Uchwyt „OMEGA" 5907556006010		«OMEGA» mounting holder of KO metal sheet for FT-036 work lamps.	10	0.60						
Uchwyt „OMEGA" INOX 5907556005600		«OMEGA» mounting holder of INOX metal sheet for FT-036 work lamps.	10	0.45						
MAG FT-036 5907556007062		Magnetic pad for FT-036 work lamps with a rubber cover.	1	0.45						

Omega holder is not included in the basic accessories of the lamp FT-063 LED.

VIDEO

WWW

650 LM

380 LM

with reversing light function

EMC

IP 68

2-functional **LED** lamp – low power consumption
European **E9** homologation – reversing light function
ElectroMagnetic Compatibility – **EMC** certificate
Shock-resistance – **PC** lampshade
Polarity connection is not optional

Lamp functions:
- reversing light – red wire loom
- universal work field illumination – black wire loom
- ground – white wire loom

Lamp parameters:
- universal supply voltage – from **12V up to 36V DC**
- operating temperature: **–40°C** to **+55°C**
- effective (measured) light beam – **380 lm** (reversing light)
- effective (measured) light beam – **650 lm** (work field)
- lamp is resistant to any weather conditions
- lamp is fully airtight

Power consumption:
- reversing light/work light: 12V/24V = 0.5A/0.25A

Power consumption (rated power):
- reversing light/work light: 12V/24V = 6W/6W

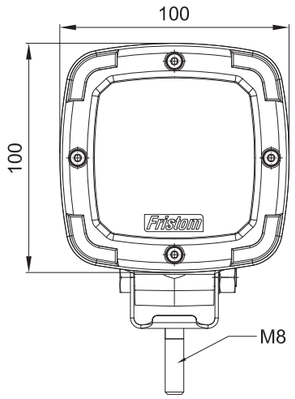

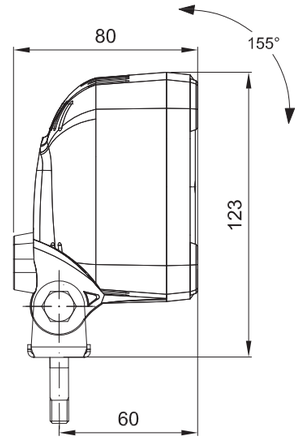

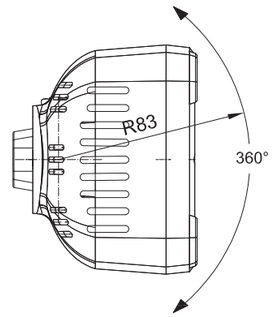

ID/EAN	Photo	Description	Unit pack		Multipack / carton			Multipack / pallet		
			qty.	kg	qty.	cm	kg	qty.	cm	kg
FT-064 LED 5907556010208		Universal LED work lamps 650 lm with reversing light function (350 lm), joint holder, black colour casing.	1	0.40	50	59x39x29	20.00	1000	120x80x165	425.00
FT-036 RAM B 5907556008489		Removable frame for FT-036 LED work lamps. White color.	5	0.10						
FT-036 RAM CZ 5907556008496		Removable frame for FT-036 LED work lamps. Black color.	5	0.10						
FT-036 RAM C 5907556008502		Removable frame for FT-036 LED work lamps. Red color.	5	0.10						
FT-036 RAM ZIEL 5907556008533		Removable frame for FT-036 LED work lamps. Green color.	5	0.10						
FT-036 RAM SZ 5907556008519		Removable frame for FT-036 LED work lamps. Grey color.	5	0.10						
FT-036 RAM Z 5907556008526		Removable frame for FT-036 LED work lamps. Yellow color.	5	0.10						
FT-036 RAM MIX 5907556008700		Set of (6 pcs.) removable frames for FT-036 work lamp, MIX - all colors.	6	0.12						

LED DAYTIME RUNNING Lamps

Daytime running lights are a type of **automotive lighting designed for daytime driving**. They can be used in conditions of good air transparency – from dawn to dusk. They provide motor vehicle drivers with adequate visibility of the road and the roadside.

WWW

LED daytime running lamp – low power consumption.
- reverse polarity protection system
- surge arrester
- automatic switching-off of daytime running lamps at vehicle start (**STANDBY** system)
- cable: 3.5 m

Technical specification:
- supply voltage: **12–36V**
- toperating temperature: **–40°C** do **+55°C**
- lamp is resistant to any weather conditions
- lamp is fully airtight

Power consumption / Rated power consumption:
- 12V/24V = 0.25A/3W; 0.125A/3W

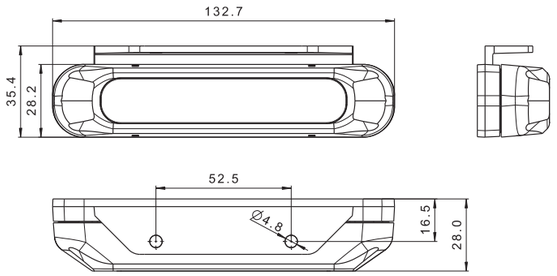

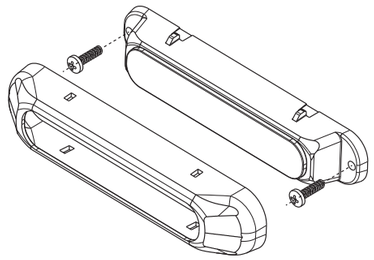

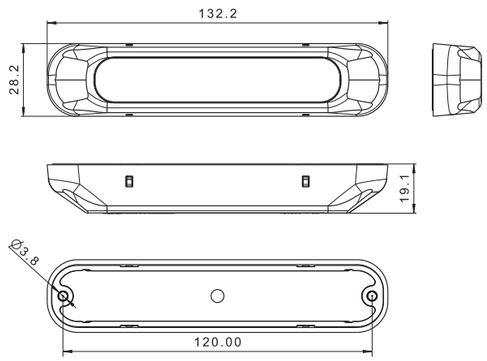

ID/EAN	Photo	Description	Unit pack		Multipack / carton			Multipack / pallet		
			qty.	kg	qty.	cm	kg	qty.	cm	kg
FT-300 LED 5907556012721		Set of daytime running LED lamps, cable's length 3.5 m.	2	0.50	32	59x39x29	16.00	640	120x80x165	345.00

REAR *Lamps*

Rear lamps are **mandatory** equipment on every vehicle. They are an important element of lighting of trucks, trailers and car carriers. They ensure adequate visibility on the road and safety of all road users.

LED Control System

WWW

VIDEO

EMC E 9

6-functional universal **LED** lamp – low power consumption
European homologation **E9**
ElectroMagnetic Compatibility **(EMC)** homologation
shock-resistance – **PC** lampshade, **ABS enclosure with M8 neck bolts**
Optimised light performance – the patented Amphenol pressure bleeding valve
Reverse polarity protection system
Integrated LED light control system, which is compatible with vehicle electronic onboard systems to prevent onboard malfunctions and DTCs

Lamp functions:
- rear running light
- STOP light
- indicator
- reversing light
- fog light
- reflector

Lamp parameters:
- supply voltage: **24V DC**
- operating temperature: **–40°C** to **+55°C**
- lamp is resistant to any weather conditions
- lamp is fully airtight

Power consumption:
- rear light: **24V = 0.2A**
- STOP light: **24V = 0.8A**
- indicator: **24V = 0.85A**
- reversing light: **24V = 0.25A**
- fog light: **24V = 0.2A**

Power consumption / Rated power:
- rear light: **24V = 5W**
- STOP light: **24V = 20W**
- indicator: **24V = 21W**
- reversing light: **24V = 6.5W**
- fog light: **24V = 5W**

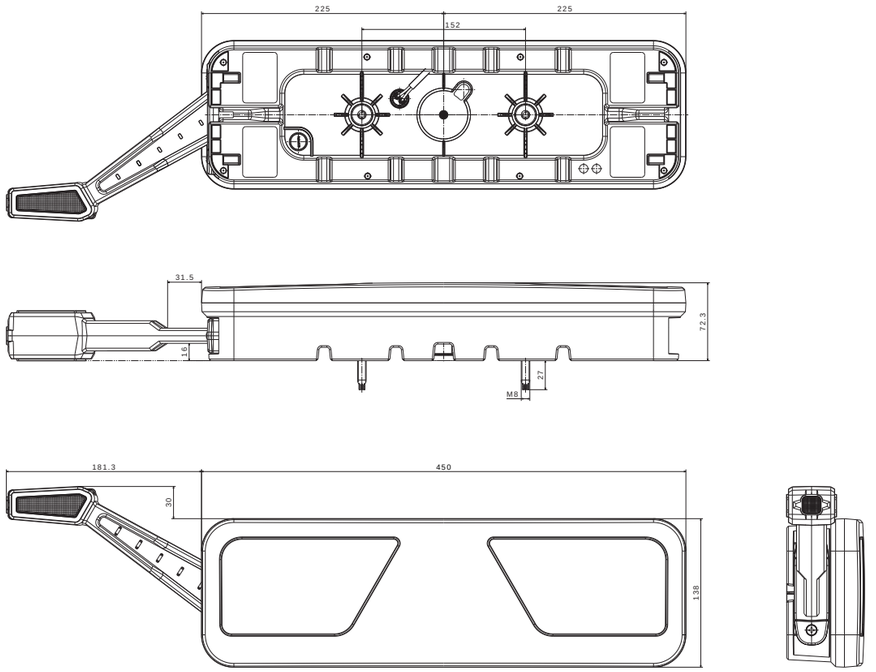

STOP LT LED

ID/EAN	Photo	Description	Unit pack		Multipack / carton			Multipack / pallet		
			qty.	kg	qty.	cm	kg	qty.	cm	kg
FT-700-066 L LED 5907556016651		Universal LED rear lamp, left, 24V, 6-functional, STOP/ POSITION/ INDICATOR/ REVERSING/ FOG/ REFLECTIVE TRIANGLE, 2.5 m cable.	1	1.740		59x39x29			120x80x165	
FT-700-066 P LED 5907556016668		Universal LED rear lamp, right, 24V, 6-functional, STOP/ POSITION/ INDICATOR/ REVERSING/ FOG/ REFLECTIVE TRIANGLE, 2.5 m cable.	1	1.740		59x39x29			120x80x165	
FT-700-146 L LED 5907556016675		Universal LED rear lamp, left, 24V, 6-functional, STOP/ POSITION/ INDICATOR/ REVERSING/ FOG/ REFLECTIVE TRIANGLE, outline marker lamp, 2.5 m cable.	1	1.940		59x39x29			120x80x165	
FT-700-146 P LED 5907556016682		Universal LED rear lamp, right, 24V, 6-functional, STOP/ POSITION/ INDICATOR/ REVERSING/ FOG/ REFLECTIVE TRIANGLE, outline marker lamp, 2.5 m cable.	1	1.940		59x39x29			120x80x165	

WWW

VIDEO

12V

EMC E9

ONE lamp, TWO faces!

*A **NEW LAMP** available with **LIGHT CONTROL SYSTEM**.*

Universal **LED** lamp – low power consumption
European homologation **E9**
ElectroMagnetic Compatibility **(EMC)** homologate on
shock-resistance – **PC** lampshade
reverse polarity protection system

Lamp functions:
- rear running light
- STOP light
- indicator
- reversing light
- fog light
- reflector

Technical specification:
- supply voltage: **12–15V DC**
- operating temperature: **–40°C** to **+55°C**
- lamp is resistant to any weather conditions

	FT-270 LED	FT-270 LED with light control system – system **CANBUS**
Power consumption:		
- rear running light	12V = 0.1A	12V = 0.4A
- STOP light:	12V = 0.3A	12V = 0.4A
- indicator:	12V = 0.35A	12V = 1.25A
- reversing light:	12V = 0.25A	12V = 0.35A
- fog light:	12V = 0.35A	12V = 0.4A
Power consumption / Rated power:		
- rear running light	12V = 1.2W	12V = 5W
- STOP light:	12V = 3.6W	12V = 5W
- indicator:	12V = 4.2W	12V = 15W
- reversing light:	12V = 3W	12V = 4W
- fog light:	12V = 4.2W	12V = 5W

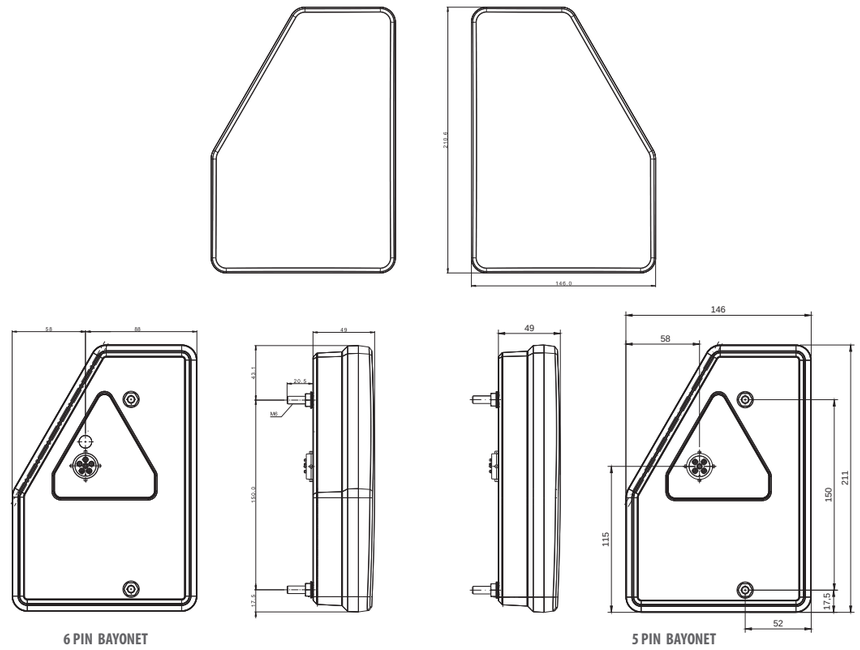

6 PIN BAYONET

5 PIN BAYONET

STOP LT LED

ID/EAN	Photo	Description	Unit pack qty.	Unit pack kg	Multipack / carton qty.	Multipack / carton cm	Multipack / carton kg	Multipack / pallet qty.	Multipack / pallet cm	Multipack / pallet kg
FT-277 L LED 5907556016125		Universal LED rear lamp left with LED reflector triangle 12V, 6-functional STOP/ POSITION/ INDICATOR/ FOG/ REVERSING, without number plate light., 1 m wire loom.	1			59x39x29			120x80x165	
FT-277 L LED BAJONET 6PIN 5907556016149		Universal LED rear lamp left with LED reflector triangle 12V, 6-functional STOP/ POSITION/ INDICATOR/ FOG/ REVERSING, without number plate light., 6 PIN BAYONET connector.	1			59x39x29			120x80x165	
FT-277 P LED 5907556016163		Universal LED rear lamp right with LED reflector triangle 12V, 6-functional STOP/ POSITION/ INDICATOR/ FOG/ REVERSING, without number plate light., 1 m wire loom.	1			59x39x29			120x80x165	
FT-277 P LED BAJONET 6PIN 5907556016187		Universal LED rear lamp right with LED reflector triangle 12V, 6-functional STOP/ POSITION/ INDICATOR/ FOG/ REVERSING, without number plate light., 6 PIN BAYONET connector.	1			59x39x29			120x80x165	
FT-277 L LED SPKPM BAJONET 5PIN 5907556017085		Universal LED left rear lamp with reflective triangle, 12V, 5-functional, STOP/ POSITION/ INDICATOR/ FOG without number plate light, 5PIN Bayonet connector.	1			59x39x29			120x80x165	
FT-277 P LED SPKCOF BAJONET 5PIN 5907556017092		Universal LED right rear lamp with reflective triangle, 12V, 5-functional, STOP/ POSITION/ INDICATOR/REVERSING without number plate light, 5PIN Bayonet connector.	1			59x39x29			120x80x165	
FT-277 L LED O SPKPM BAJONET 5PIN 5907556018372		Universal LED left rear lamp with reflective triangle, 12V, 5-functional, STOP/ POSITION/ INDICATOR/ FOG without number plate light, 5PIN Bayonet connector **with LED system control**.	1			59x39x29			120x80x165	
FT-277 P LED O SPKCOF BAJONET 5PIN 5907556018389		Universal LED right rear lamp with reflective triangle, 12V, 5-functional, STOP/ POSITION/ INDICATOR/REVERSING without number plate light, 5PIN Bayonet connector **with LED system control**.	1			59x39x29			120x80x165	

canbus

FT-600 LED

(version for vehicle)

WWW

VIDEO

INTELLIGENT STOP LIGHT

As a new trend on the market the lamp uses intelligent STOP light technology. When the fog light is on, the STOP function beams partly to meet requirements for approval.

dynamic indicator

FT-610 LED

(version for trailer)

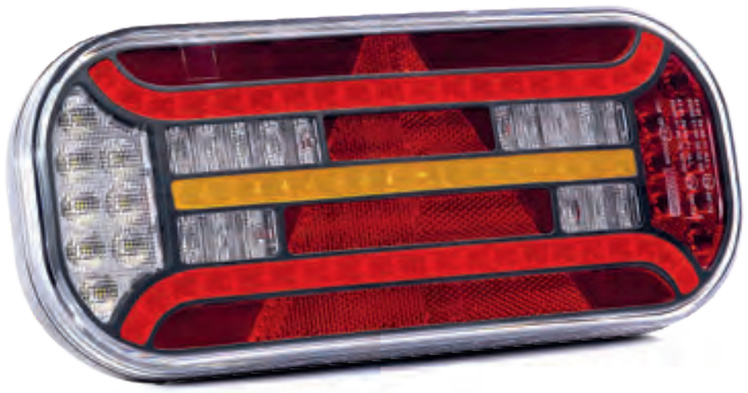

WWW

VIDEO

EMC E 9

7-functional universal **LED** lamp – low power consumption
European homologation **E9**
ElectroMagnetic Compatibility (**EMC**) homologation
Shock-resistance – **PC** lampshade
Reverse polarity protection system

Lamp functions:
- rear running light
- number plate light (bottom)
- STOP light
- indicator
- reversing light
- fog light
- reflector

Technical specification:
- supply voltage: **12–36V DC**
- operating temperature: **–40°C** do **+55°C**
- lamp is resistant to any weather conditions
- lamp is fully airtight

Power consumption:
- rear running light + number plate light: **12V/24V = 0.2A/0.2A**
- STOP light: **12V/24V = 0.3A/0.3A**
- indicator: **12V/24V = 0.85A/0.85A**
- reversing light: **12V/24V = 0.2A/0.25A**
- fog light: **12V/24V = 0.15A/0.15A**

Power consumption / Rated power:
- rear running light + number plate light: **12V/24V = 2.5W/5W**
- STOP light: **12V/24V = 4W/8W**
- indicator: **12V/24V = 10W/20W**
- reversing light: **12V/24V = 2.5W/6W**
- fog light: **12V/24V = 2W/4W**

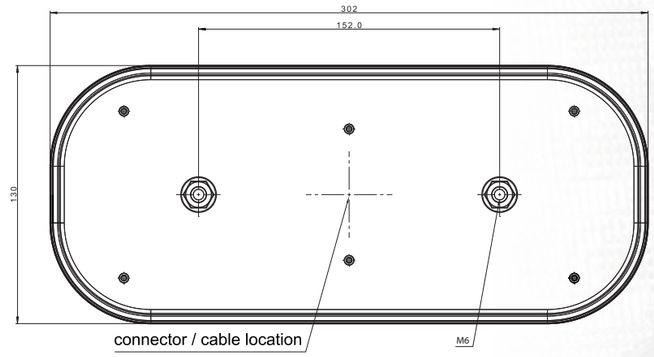

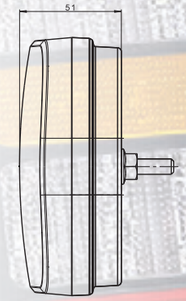

STOP LT LED

ID/EAN	Photo	Description	Unit pack		Multipack / carton			Multipack / pallet		
			qty.	kg	qty.	cm	kg	qty.	cm	kg
FT-600 L LED DI 5907556014886		Universal LED rear lamp 12-36V, left 6-functional, stop/ position/ indicator/ reversing/ fog/ reflector without number plate light, 1 m cable.	1	1.05	20	59x39x29	20.50	400	120x80x165	410.00
FT-600 L T LED DI 5907556014893		Universal LED rear lamp 12-36V, left 7-functional, stop/ position/ indicator/ reversing/ fog/ reflector with number plate light, 1 m cable.	1	0.95	20	59x39x29	20.30	400	120x80x165	406.00
FT-600 P LED DI 5907556014909		Universal LED rear lamp 12-36V, right 6-functional, stop/ position/ indicator/ reversing/ fog/ reflector without number plate light, 1 m cable.	1	1.05	20	59x39x29	20.50	400	120x80x165	410.00
FT-600 P T LED DI 5907556014916		Universal LED rear lamp 12-36V, right 7-functional, stop/ position/ indicator/ reversing/ fog/ reflector with number plate light, 1 m cable.	1	0.95	20	59x39x29	20.30	400	120x80x165	406.00
FT-610 L LED DI 5907556015005		Universal LED rear lamp with reflective triangle, 12-36V, left 6-functional, stop/ position/ indicator/ reversing/ fog without number plate light, 1 m cable.	1	0.95	20	59x39x29	20.30	400	120x80x165	406.00
FT-610 L T LED DI 5907556015012		Universal LED rear lamp with reflective triangle, 12-36V, left 6-functional, stop/ position/ indicator/ reversing/ fog with number plate light, 1 m cable.	1	1.05	20	59x39x29	20.50	400	120x80x165	410.00
FT-610 P LED DI 5907556015029		Universal LED rear lamp with reflective triangle, 12-36V, right 6-functional, stop/ position/ indicator/ reversing/ fog without number plate light, 1 m cable.	1	0.95	20	59x39x29	20.30	400	120x80x165	406.00
FT-610 P T LED DI 5907556015036		Universal LED rear lamp with reflective triangle, 12-36V, right 6-functional, stop/ position/ indicator/ reversing/ fog with number plate light, 1 m cable.	1	1.05	20	59x39x29	20.50	400	120x80x165	410.00

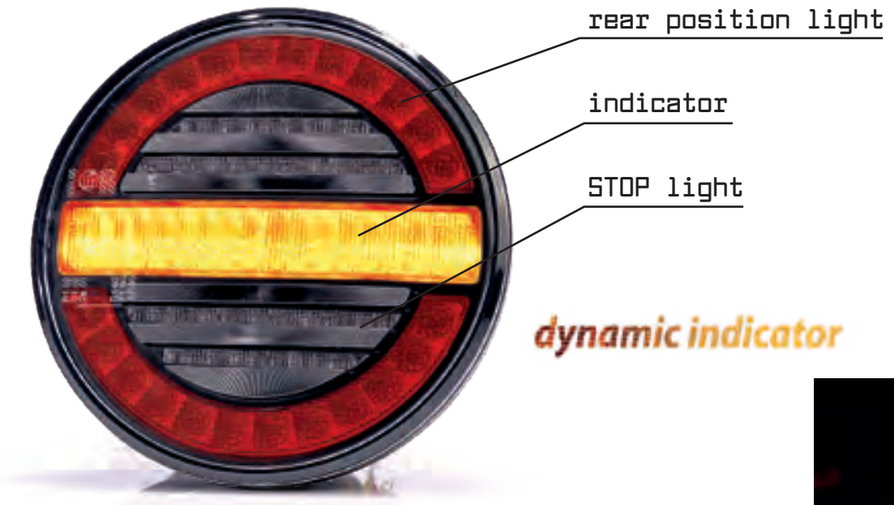

dynamic indicator

WWW

VIDEO

EMC E 9

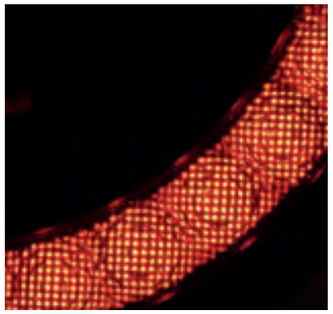

3-functional universal **LED** rear lamp – low power consumption
European **E9** homologation
ElectroMagnetic Compatibility – **EMC** certificate
Shock-resistance – **PC** lampshade
Reverse polarity protection system
The lamp depth is only **35 mm**
Dynamic indicator
Crystal-like position light

In the lamp it has been used an **innovative** position light that **imitates microcrystals**. This solution creates the **illusion of living light**, even while looking at the lamp from different angles.

Lamp functions:
- rear position light
- STOP light
- indicator

Technical specification:
- supply voltage: **12–36V DC**
- operating temperature: **–40°C** to **+55°C**
- lamp is resistant to any weather conditions
- lamp is **fully airtight**
- cable out **1 m**

Power consumption:
- rear position light : **12V/24V = 0.05A/0.05A**
- STOP light: **12V/24V = 0.2A/0.2A**
- indicator: **12V/24V = 0.35A/0.35A**

Power consumption / Rated power:
- rear position light : **12V/24V = 0.6W/1.2W**
- STOP light: **12V/24V = 2.5W/5W**
- indicator: **12V/24V = 4.5W/9W**

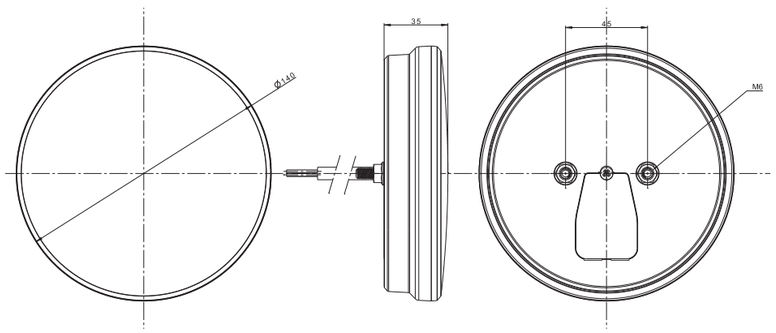

ID/EAN	Photo	Description	Unit pack qty.	Unit pack kg	Multipack / carton qty.	Multipack / carton cm	Multipack / carton kg	Multipack / pallet qty.	Multipack / pallet cm	Multipack / pallet kg
FT-213 LED DI 5907556015302		Universal LED 3-functional rear lamp 12/24V, round for separate mounting, rear position, stop, indicator lights, cable 1 m.	1	0,384	50	59x39x29	19,40	1000	120x80x165	413,00

WWW

VIDEO

EMC E 9

dynamic indicator

3-functional **LED l**amp – low power consumption
European homologation **E9** – horizontal assembly only
ElectroMagnetic Compatibility **(EMC); R10** homologation
Shock-resistance – PC lampshade
Reverse polarity protection system
Dynamic indcator

Lamp functions:
- Rear running light
- STOP light
- Indicator

Technical specification:
- supply voltage: **12–36V DC**
- operating temperature: **–40°C** to **+55°C**
- lamp is resistant to any weather conditions
- lamp is fully airtight

Power consumption:
- rear running light: **12V/24V = 0.1A/0.1A**
- STOP light: **12V/24V = 0.2A/0.2A**
- indicator: **12V/24V = 0.35A/0.35A**

Power consumption (rated power):
- rear running light: **12V/24V = 1.5W/3W**
- STOP light: **12V/24V = 2.5W/5W**
- indicator: **12V/24V = 4.5W/9W**

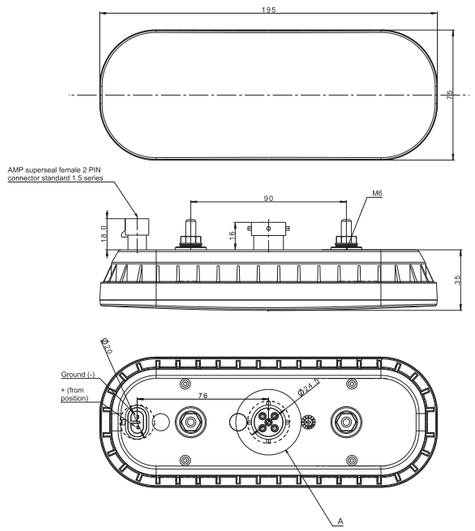

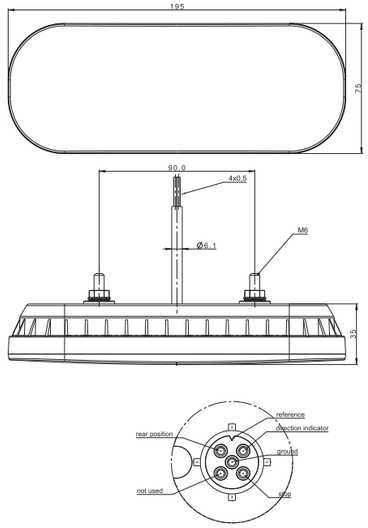

ID/EAN	Photo	Description	Unit pack qty.	Unit pack kg	Multipack / carton qty.	Multipack / carton cm	Multipack / carton kg	Multipack / pallet qty.	Multipack / pallet cm	Multipack / pallet kg
FT-320 LED DI 5907556013803		Universal LED rear lamp with a wiring loom, smoked lampshade.	1	0.384	60	59x39x29	23.04	1200	120x80x165	485.80
FT-320 LED DI BAJONET 5907556013810		Universal LED rear lamp, with a bayonet connector, smoked lampshade.	1	0.316	60	59x39x29	18.96	1200	120x80x165	404.20
FT-320 LED DI BAJONET + SS 5907556013827		Universal LED rear lamp with a bayonet connector and an additional Super Seal socket for fog or reverse light.	1	0.326	60	59x39x29	19.56	1200	120x80x165	416.20

VIDEO

WWW

FT-230 PM LED DI

dynamic indicator

FT-230 COF LED DI

EMC E 9

6-functional **LED** rear lamp - low power consumption
- European homologation **E9**
- ElectroMagnetic Compatibility **(EMC) homologation R10**
- shock-resistance – **PC** lampshade
- reverse polarity protection system

Lamp functions:
- rear running light
- number plate light homologated on an universal performance
  34.4 mm<<X>>102.2 mm; version NT – has no function of number plate light
- STOP light
- indicator
- reversing light (version COF), or fog light (version PM)
- reflector

Technical specification:
- supply voltage: **12–36V DC**
- operating temperature: **–40°C** to **+55°C**
- lamp is resistant to any weather conditions
- lamp is fully airtight

Power consumption:
- rear running light + number plate light: **12V/24V = 0.12A/0.12A**
- STOP light: **12V/24V = 0.12A/0.12A**
- indicator: **12V/24V = 0.35A/0.35A**
- reversing light: **12V/24V = 0.22A/0.22A**
- fog light: **12V/24V = 0.16A/0.16A**

Power consumption / Rated power:
- rear running light + number plate light: **12V/24V = 1.5W/3W**
- STOP light: **12V/24V = 1.5W/3W**
- indicator: **12V/24V = 4.5W/9W**
- reversing light: **12V/24V = 2.8W/5.5W**
- fog light: **12V/24V = 2W/4W**

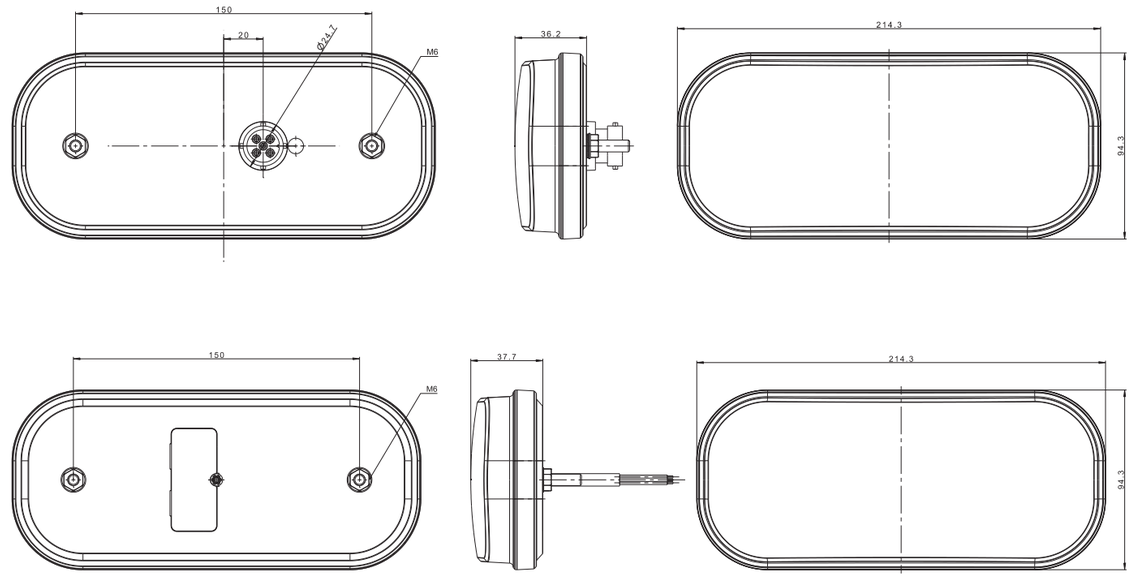

ID/EAN	Photo	Description	Unit pack		Multipack / carton			Multipack / pallet		
			qty.	kg	qty.	cm	kg	qty.	cm	kg
FT-230 COF LED DI 5907556014169		Universal LED rear lamp 12-36V, 6-functional, STOP/POSITION/INDICATOR/REVERSING/ NUMBER PLATE LIGHT/REFLECTOR, dynamic indicator, 1 m wire loom.	1	0.48	40	59x39x29	19.20	800	120x80x165	409.00
FT-230 COF LED DI BAJONET 5PIN 5907556014176		Universal LED rear lamp 12-36V, 6-functional STOP/POSITION/INDICATOR/ REVERSING/NUMBER PLATE LIGHT/ REFLECTOR, dynamic indicator, 5 PIN bayonet connector.	1	0.41	40	59x39x29	16.40	800	120x80x165	353.00
FT-230 PM LED DI 5907556014183		Universal LED rear lamp 12-36V, 6-functional STOP/POSITION/INDICATOR/FOG /NUMBER PLATE LIGHT/REFLECTOR, dynamic indicator, 1 m wire loom.	1	0.48	40	59x39x29	19.20	800	120x80x165	409.00
FT-230 PM LED DI BAJONET 5PIN 5907556014190		Universal LED rear lamp 12-36V, 6-functional STOP/POSITION/INDICATOR/ FOG /NUMBER PLATE LIGHT/REFLECTOR, dynamic indicator, 5 PIN bayonet connector.	1	0.41	40	59x39x29	16.40	800	120x80x165	353.00
FT-230 NT COF LED DI 5907556014206		Universal LED rear lamp 12-36V, 5-funcitonal STOP/POSITION/INDICATOR/ REVERSING/REFLECTOR without number plate light., dynamic indicator, 1 m wire loom.	1	0.48	40	59x39x29	19.20	800	120x80x165	409.00
FT-230 NT COF LED DI BAJONET 5PIN 5907556014213		Universal LED rear lamp 12-36V, 5-funcitonal STOP/POSITION/INDICATOR/REVERSING/ REFLECTOR without number plate light., dynamic indicator, 5 PIN bayonet connector.	1	0.41	40	59x39x29	16.40	800	120x80x165	353.00
FT-230 NT PM LED DI 5907556014220		Universal LED rear lamp 12-36V, 5-funcitonal STOP/POSITION/INDICATOR/FOG /REFLECTOR without number plate light., dynamic indicator, 1 m wire loom.	1	0.48	40	59x39x29	19.20	800	120x80x165	409.00
FT-230 NT PM LED DI BAJONET 5 PIN 5907556014237		Universal LED rear lamp 12-36V, 5-funcitonal STOP/POSITION/INDICATOR/FOG /REFLECTOR without number plate light., dynamic indicator, 5 PIN bayonet connector.	1	0.41	40	59x39x29	16.40	800	120x80x165	353.00

VIDEO

WWW

12V

EMC E 9

ONE lamp, TWO faces!

*A **NEW LAMP** available with **LIGHT CONTROL SYSTEM**.*

Universal **LED** lamp – low power consumption
European homologation **E9**
ElectroMagnetic Compatibility **(EMC)** homologate on
shock-resistance – **PC** lampshade
reverse polarity protection system

Lamp functions:
- rear running light
- number plate light
- STOP light
- indicator
- fog light (depending on the version)
- reversing light (depending on the version)
- reflector (triangle)

Technical specification:
- supply voltage: **12–15V DC**
- operating temperature: **–40°C** to **+55°C**
- lamp is resistant to any weather conditions
- lamp is fully airtight

	FT-270 LED	FT-270 LED with light control system – system **CANBUS**
Power consumption:		
- rear running light + number plate light:	12V = 0.1A	12V = 0.4A
- version without number plate light:	12V = 0.05A	12V = 0.35A
- STOP light:	12V = 0.2A	12V = 0.4A
- indicator:	12V = 0.2A	12V = 1.25A
- reversing light:	12V = 0.2A	12V = 0.35A
- fog light:	12V = 0.2A	12V = 0.4A
Power consumption / Rated power:		
- rear running light + number plate light:	12V = 1.2W	12V = 5W
- version without number plate light:	12V = 0.6W	12V = 4W
- STOP light:	12V = 2.4W	12V = 5W
- indicator:	12V = 2.4W	12V = 15W
- reversing light:	12V = 2.4W	12V = 4W
- fog light:	12V = 2.4W	12V = 5W

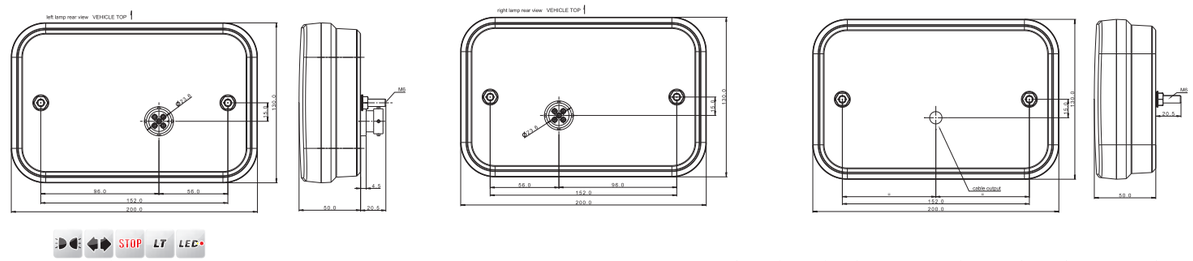

ID/EAN	Photo	Description	Unit pack qty.	Unit pack kg	Multipack / carton qty.	Multipack / carton cm	Multipack / carton kg	Multipack / pallet qty.	Multipack / pallet cm	Multipack / pallet kg
FT-270 L NT LED PM 5907556014510		Universal LED rear lamp left with LED reflector triangle 12V, 5-functional STOP/ POSITION/INDICATOR /FOG, without number plate light., 1 m wire loom.	1	0.65	22	59x39x29	14.30	440	120x80x165	311.00
FT-270 L NT LED PM BAJONET 5 PIN 5907556014534		Universal LED rear lamp left with LED reflector triangle 12V, 5-functional STOP/ POSITION/INDICATOR /FOG, without number plate light., 5 PIN BAYONET connector.	1	0.60	22	59x39x29	13.20	440	120x80x165	289.00
FT-270 L TB LED PM 5907556014558		Universal LED rear lamp left with LED reflector triangle 12V, 6-functional STOP/ POSITION/INDICATOR /FOG, with number plate light., 1 m wire loom.	1	0.65	22	59x39x29	14.30	440	120x80x165	311.00
FT-270 L TB LED PM BAJONET 5PIN 5907556014572		Universal LED rear lamp left with LED reflector triangle 12V, 6-functional STOP/ POSITION/INDICATOR /FOG, with number plate light., 5 PIN BAYONET connector.	1	0.60	22	59x39x29	13.20	440	120x80x165	289.00
FT-270 P NT LED COF 5907556014527		Universal LED rear lamp right with LED reflector triangle 12V, 5-functional STOP/ POSITION/INDICATOR /REVERSING, without number plate light., 1 m wire loom.	1	0.65	22	59x39x29	14.30	440	120x80x165	311.00
FT-270 P NT LED COF BAJONET 5PIN 5907556014541		Universal LED rear lamp right with LED reflector triangle 12V, 5-functional STOP/ POSITION/INDICATOR /REVERSING, without number plate light., 5 PIN BAYONET connector.	1	0.60	22	59x39x29	13.20	440	120x80x165	289.00
FT-270 P TB LED COF 5907556014565		Universal LED rear lamp right with LED reflector triangle 12V, 6-functional STOP/ POSITION/INDICATOR /REVERSING, with number plate light., 1 m wire loom.	1	0.65	22	59x39x29	14.30	440	120x80x165	311.00
FT-270 P TB LED COF BAJONET 5 PIN 5907556014589		Universal LED rear lamp right with LED reflector triangle 12V, 6-functional STOP/ POSITION/INDICATOR /REVERSING, with number plate light., 5 PIN BAYONET connector.	1	0.60	22	59x39x29	13.20	440	120x80x165	289.00
FT-270 L NT LED O PM BAJONET 5 PIN 5907556016200		Universal LED left rear lamp with reflective triangle, 12V, 5-functional, STOP/ POSITION/ INDICATOR/ FOG without number plate light, 5 PIN Bayonet connector, **with LED control system**.	1	0.60	22	59x39x29	13.20	440	120x80x165	289.00
FT-270 L TB LED O PM BAJONET 5PIN 5907556016217		Universal LED left rear lamp with reflective triangle, 12V, 6-functional, STOP/ POSITION/ INDICATOR/ FOG with side number plate light, 5 PIN Bayonet connector, **with LED system control**.	1	0.60	22	59x39x29	13.20	440	120x80x165	289.00
FT-270 P NT LED O COF BAJONET 5PIN 5907556016224		Universal LED right rear lamp with reflective triangle, 12V, 5-functional, STOP/ POSITION/ INDICATOR/ REVERSING without number plate light, 5 PIN Bayonet connector, **with LED system control**.	1	0.60	22	59x39x29	13.20	440	120x80x165	289.00
FT-270 P TB LED O COF BAJONET 5 PIN 5907556016231		Universal LED right rear lamp with reflective triangle 12V, 6-functional, STOP/ POSITION/ INDICATOR /REVERSING with side number plate light, 5 PIN Bayonet connector, **with LED system control**.	1	0.60	22	59x39x29	13.20	440	120x80x165	289.00

canbus

EMC E9

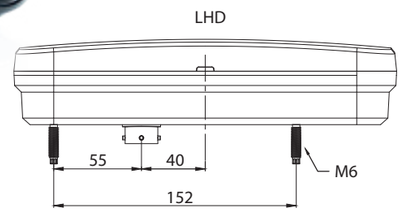

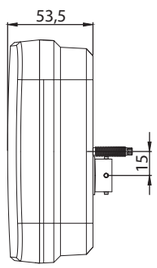

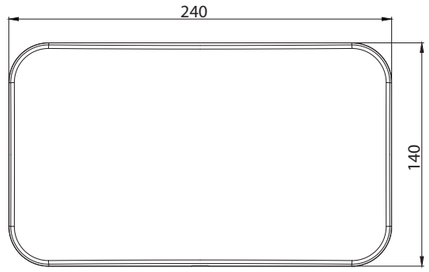

ONE lamp, TWO faces!

Universal **LED** lamp – low power consumption
European homologation **E9**
ElectroMagnetic Compatibility **(EMC)** homologate on
shock-resistance – **PC** lampshade
reverse polarity protection system

Lamp functions:
- rear running light
- STOP light
- indicator
- fog light
- reversing light
- number plate light (depending on the version)
- reflector (triangle) **kat. IIIA**

Technical specification:
- supply voltage: **12–36V DC,** (FT-371 LED O: **12–15V DC)**
- operating temperature: **–40°C** to **+55°C**
- lamp is resistant to any weather conditions
- lamp is fully airtight

LIGHT CONTROL SYSTEM

	FT-370 LED	FT-370 LED O with light control system – system **CANBUS**
Power consumption:		
- rear running light:	12V/24V – 0.1A/0.1A	12V = 0.4A
-STOP light:	12V/24V – 0.15A/0.08A	12V = 0.55A
- indicator:	12V/24V – 0.3A/0.3A	12V = 1.2A
- reversing light:	12V/24V – 0.2A/0.1A	12V = 0.3A
- fog light:	12V/24V – 0.3A/0.15A	12V = 0.3A
Power consumption / Rated power:		
- rear running light:	12V/24V – 1.5W/3W	12V = 5W
- STOP light:	12V/24V – 2W/2.2W	12V = 7W
- indicator:	12V/24V – 4W/8W	12V = 15W
- reversing light:	12V/24V – 3W/3.2W	12V = 4W
- fog light:	12V/24V – 4W/4.2W	12V = 4W

ID/EAN	Photo	Description	Unit pack qty.	Unit pack kg	Multipack / carton qty.	Multipack / carton cm	Multipack / carton kg	Multipack / pallet qty.	Multipack / pallet cm	Multipack / pallet kg
FT-370 L NT LED 5907556017184		Universal LED rear lamp 12-36V, 6-functional, left without number plate light, 1 m cable.	1			59x39x29			120x80x165	
FT-370 P NT LED 5907556017191		Universal LED rear lamp 12-36V, 6-functional, right without number plate light, 1 m cable.	1			59x39x29			120x80x165	
FT-370 L NT LED BAJONET 6PIN 5907556017207		Universal LED rear lamp 12-36V, 6-functional, left without number plate light, 6 PIN Bayonet connector.	1			59x39x29			120x80x165	
FT-370 P NT LED BAJONET 6PIN 5907556017214		Universal LED rear lamp 12-36V, 6-functional, right without number plate light, 6 PIN Bayonet connector.	1			59x39x29			120x80x165	
FT-370 L TB LED 5907556017221		Universal LED rear lamp 12-36V, 7-functional, left z with side number plate light, 1 m cable.	1			59x39x29			120x80x165	
FT-370 P TB LED 5907556017238		Universal LED rear lamp 12-36V, 7-functional, right z with side number plate light, 1 m cable.	1			59x39x29			120x80x165	
FT-370 L TB LED BAJONET 6PIN 5907556017245		Universal LED rear lamp 12-36V, 7-functional, left with side number plate light, 6 PIN Bayonet connector.	1			59x39x29			120x80x165	
FT-370 P TB LED BAJONET 6PIN 5907556017252		Universal LED rear lamp 12-36V, 7-functional, right with side number plate light, 6 PIN Bayonet connector.	1			59x39x29			120x80x165	
FT-370 L NT LED O BAJONET 6PIN 12V 5907556017283		Universal LED rear lamp 12V, 6-functional, left without number plate light, 6 PIN Bayonet connector, **WITH LED SYSTEM CONTROL**.	1			59x39x29			120x80x165	
FT-370 P NT LED O BAJONET 6PIN 12V 5907556017290		Universal LED rear lamp 12V, 6-functional, right without number plate light, 6 PIN Bayonet connector, **WITH LED SYSTEM CONTROL.**	1			59x39x29			120x80x165	
FT-370 L TB LED O BAJONET 6PIN 12V 5907556017320		Universal LED rear lamp 12V, 7-functional, left with side number plate light, 6 PIN Bayonet connector **WITH LED SYSTEM CONTROL.**	1			59x39x29			120x80x165	
FT-370 P TB LED O BAJONET 6PIN 12V 5907556017337		Universal LED rear lamp 12V, 7-functional, right with side number plate light, 6 PIN Bayonet connector **WITH LED SYSTEM CONTROL.**	1			59x39x29			120x80x165	

Canbus

WWW

VIDEO

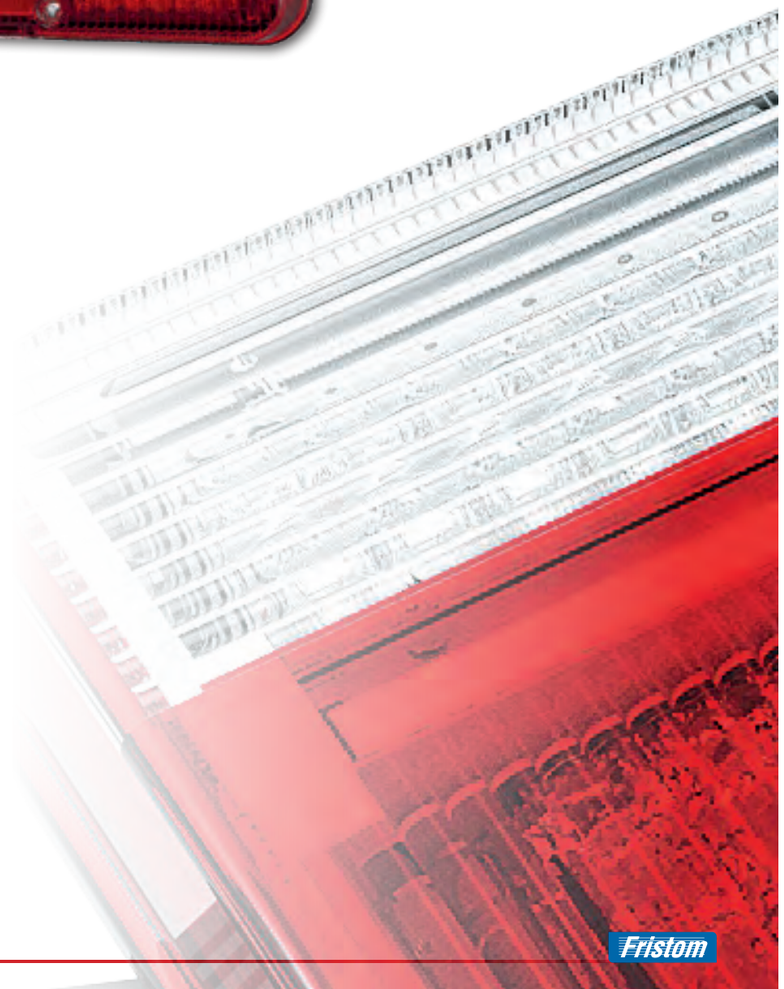

Rear Combination Lamp, 7 function – full LED version

LAMP FUNCTIONS:
- rear position light
- number plate light
- brake light (STOP)
- direction indicator
- reverse light
- rear fog light
- triangle reflex reflector

TECHNICAL SPECIFICATION:
- supply voltage: **12–36V DC**
- operating temperature: **–40°C** to **+55°C**
- reverse polarity protection
- the lamp is equipped with the interchangeable anti-shock modules resistant to any weather conditions

LED POWER CONSUMPTION:
- rear position light + number plate light **12V/24V = 0,12A / 0,12A**
- brake light (STOP): **12V/24V = 0.34A/0.17A**
- direction indicator: **12V/24V = 0.4A/0.2A**
- revere light: **12V/24V = 0.1A/0.05A**
- rear fog light: **12V/24V = 0.34A/0.17A**

POWER CONSUMPTION (RATED POWER):
- rear position light + number plate light **12V/24V = 1.5W / 3.0W**
- brake light (STOP): **12V/24V = 4.1W/4.1W**
- direction indicator: **12V/24V = 5W/5W**
- reverse light: **12V/24V = 1.2W/1.2W**
- rear fog light: **12V/24V = 4.1W/4.1W**

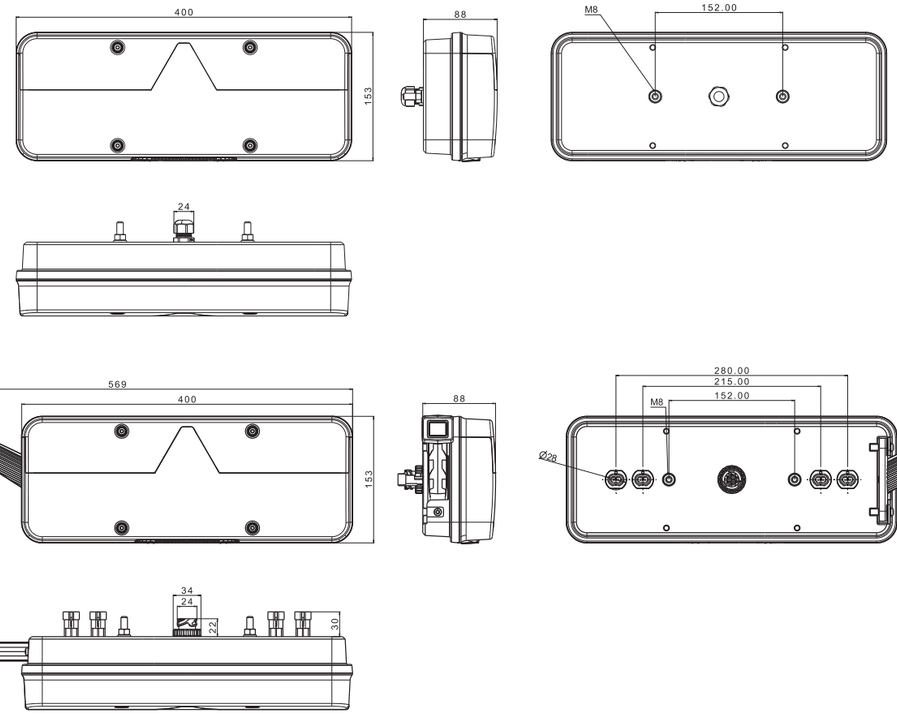

LED version	1	2	3	4	5	6	7	8
ID/EAN	left	right	end outline marker lamp	number plate light	wire	AMP connector	superseal connector	back-up alarm
FT-500-15 LED 5907556013087	●				●			
FT-500-145 LED 5907556013100	●			●	●			
FT-500-16 LED 5907556013117	●					●		
FT-500-146 LED 5907556013131	●			●		●		
FT-500-135 LED 5907556013148	●		●		●			
FT-500-136 LED 5907556013155	●		●			●		
FT-500-1346 LED 5907556013179	●		●	●		●		
FT-500-1367 LED 5907556013186	●		●			●	●	
FT-500-25 LED 5907556013094		●			●			
FT-500-26 LED 5907556013124		●				●		
FT-500-235 LED 5907556013216		●	●		●			
FT-500-236 LED 5907556013162		●	●			●		
FT-500-2367 LED 5907556013193		●	●			●	●	
FT-500-23678 LED 5907556013209		●	●			●	●	●

Rear Combination Lamp, 7 function – bulb version

- rear position light (LED)
- number plate light (LED)
- brake light (STOP); (P21W bulb)
- direction indicator (P21W bulb)
- reverse light (P21W bulb)
- rear fog light (P21W bulb)
- triangle reflex reflector

Rear Combination Lamps in bulb version are always equipped with LED position light and LED number plate light.

ID/EAN	Photo	Description
FT-500 K 5907556013520		Lampshade to lamp KINGPOINT Left / Right side
WKLAD FT-500 COF L 5907556013445		Reversing panel left LED
WKLAD FT-500 COF P 5907556013452		Reversing panel right LED
WKLAD FT-500 KIER L 5907556013469		Indicator panel left LED
WKLAD FT-500 KIER P 5907556013476		Indicator panel right LED
WKLAD FT-500 PM P 5907556013490		Fog panel right LED
WKLAD FT-500 PM L 5907556013643		For panel left LED
WKLAD FT-500 STOP P 5907556013506		Stop panel right LED
WKLAD FT-500 STOP L 5907556013650		Stop panel left LED

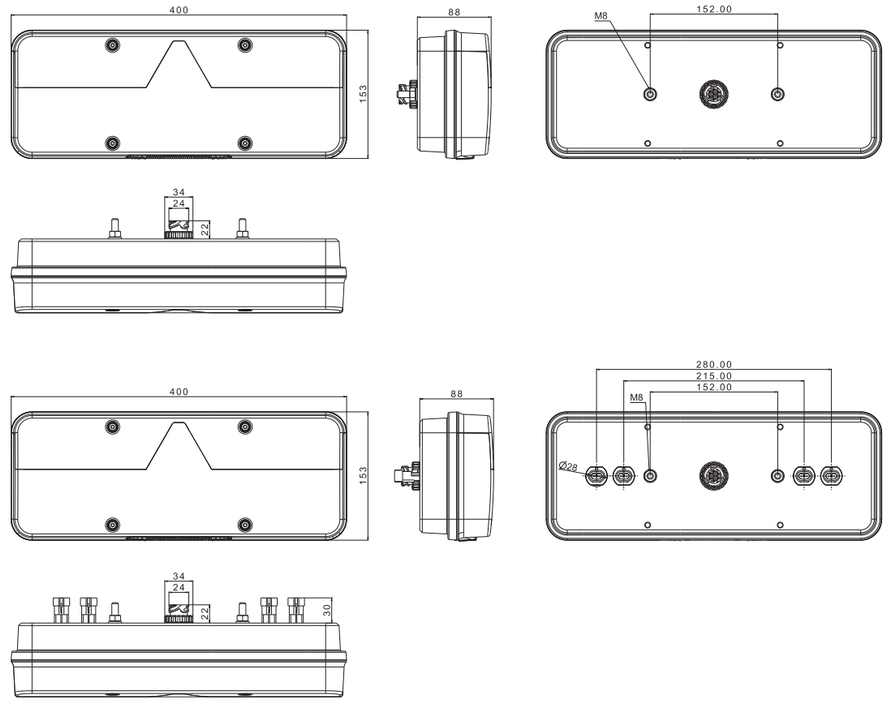

BULB version	1	2	3	4	5	6	7	8
ID/EAN	left	right	end outline marker lamp	number plate light	wire	AMP connector	superseal connector	back-up alarm
FT-500-15 5907556013285	●				●			
FT-500-145 5907556013261	●			●	●			
FT-500-16 5907556013292	●					●		
FT-500-146 5907556013278	●			●		●		
FT-500-135 5907556013230	●		●		●			
FT-500-136 5907556013247	●		●			●		
FT-500-1346 5907556013223	●		●	●		●		
FT-500-1367 5907556013254	●		●			●	●	
FT-500-25 5907556013346		●			●			
FT-500-26 5907556013353		●				●		
FT-500-235 5907556013308		●	●		●			
FT-500-236 5907556013315		●	●			●		
FT-500-2367 5907556013322		●	●			●	●	
FT-500-23678 5907556013339		●	●			●	●	●

WWW

VIDEO

EMC E 9

7-functional universal **LED** lamp – low power consumption
- european homologation **E9**
- ElectroMagnetic Compatibility **(EMC)** homologation
- shock-resistance – **PC** lampshade
- reverse polarity protection system

Technical specification:
- rear running light
- number plate light
- **STOP** light
- indicator
- fog light
- reflector
- reversing light

Technical specification:
- supply voltage: **12–36V DC**
- operating temperature: **–40°C** to **+55°C**
- lamp is resistant to any weather conditions
- lamp is fully airtight

Power consumption:
- rear running light + number plate light – **12/ 24V = 0.25A/ 0.2A**
- STOP light – **12/ 24V = 0.08A/0.08A**
- indicator – **12/ 24V = 0.12A/0.12A**
- reversing light – **12/ 24V = 0.2A/ 0.1A**
- fog light – **12/ 24V = 0.15A/ 0.08A**

Power consumption / Rated power:
- rear running light + number plate light – **12/ 24V = 3W/ 5W**
- STOP light – **12/ 24V = 1W/ 2W**
- indicator – **12/ 24V = 1.5W/ 3W**
- reversing light – **12/ 24V = 2.5W/2.5W**
- fog light – **12/ 24V = 2W/2W**

ID/EAN	Photo	Description	Unit pack qty.	Unit pack kg	Multipack / carton qty.	Multipack / carton cm	Multipack / carton kg	Multipack / pallet qty.	Multipack / pallet cm	Multipack / pallet kg
FT-170 L NT LED 5907556009271		Universal LED rear lamp 12-36V, 6-functional, left without number plate light, 1 m cable.	1	0.94	20	59x39x29	18.80	400	120x80x165	401.00
FT-170 L NT LED BAJONET 6PIN 5907556009288		Universal LED rear lamp 12-36V, 6-functional, left without number plate light, 6 PIN Bayonet connector.	1	0.91	20	59x39x29	18.20	400	120x80x165	389.00
FT-170 L NT LED SPK 5907556009479		Universal LED rear lamp 12-36V, 4-functional, left without number plate light, (stop /position/ indicator/reflector), 1 m cable.	1	0.94	20	59x39x29	18.80	400	120x80x165	401.00
FT-170 L NT LED SPK BAJONET 5PIN 5907556006423		Universal LED rear lamp 12-36V, 3-functional, left without number plate light, (stop /position/ indicator/reflector), 5 PIN Bayonet connector.	1	0.91	20	59x39x29	18.20	400	120x80x165	389.00
FT-170 L NT LED SPKPM 5907556009301		Universal LED rear lamp 12-36V, 5-functional, left without number plate light. (stop/ position/ indicator/ fog light/reflector), 1 m cable.	1	0.94	20	59x39x29	18.80	400	120x80x165	401.00
FT-170 L NT LED SPKPM BAJONET 5PIN 5907556009622		Universal LED rear lamp 12-36V, 5-functional, left without number plate light. (stop/ position/ indicator/ fog light/reflector), 5 PIN Bayonet connector.	1	0.91	20	59x39x29	18.20	400	120x80x165	389.00
FT-170 L TB LED 5907556006287		Universal LED rear lamp 12-36V, 7-functional, left z with side number plate light, 1 m cable.	1	0.94	20	59x39x29	18.80	400	120x80x165	401.00
FT-170 L TB LED AMP 7PIN 5907556009646		Universal LED rear lamp 12-36V, 7-functional, left with side number plate light, 7 PIN AMP connector.	1	0.88	20	59x39x29	17.60	400	120x80x165	377.00
FT-170 L TB LED BAJONET 6PIN 5907556006294		Universal LED rear lamp 12-36V, 7-functional, left with side number plate light, 6 PIN Bayonet connector.	1	0.91	20	59x39x29	18.20	400	120x80x165	389.00
FT-170 L TB LED SPK 5907556009455		Universal LED rear lamp 12-36V, 5-functional, left with side number plate light. (stop/ position/ indicator/reflector), 1 m cable.	1	0.94	20	59x39x29	18.80	400	120x80x165	401.00
FT-170 L TB LED SPKPM 5907556009325		Universal LED rear lamp 12-36V, 6-functionl, left with side number plate light, (stop/ position/ indicator/fog light/ reflector), 1 m cable.	1	0.94	20	59x39x29	18.80	400	120x80x165	401.00
FT-170 L TB LED SPKPM BAJONET 5PIN 5907556009608		Universal LED rear lamp 12-36V, 6-functionl, left with side number plate light, (stop/ position/ indicator/fog light/ reflector), 5 PIN Bayonet connector.	1	0.91	20	59x39x29	18.20	400	120x80x165	389.00
FT-170 L TD LED 5907556006300		Universal LED rear lamp 12-36V, 7-functional, left with bottom number plate light, 1 m cable.	1	0.94	20	59x39x29	18.80	400	120x80x165	401.00
FT-170 L TD LED AMP 7PIN 5907556009585		Universal LED rear lamp 12-36V, 7-functional, left with bottom number plate light, 7 PIN AMP connector.	1	0.88	20	59x39x29	17.60	400	120x80x165	377.00
FT-170 L TD LED BAJONET 6PIN 5907556006324		Universal LED rear lamp 12-36V, 7-functional, left with bottom number plate light, 6PIN Bayonet connector.	1	0.91	20	59x39x29	18.20	400	120x80x165	389.00

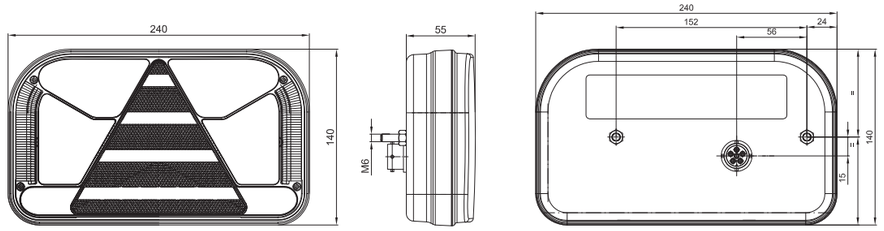

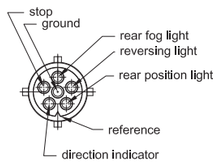

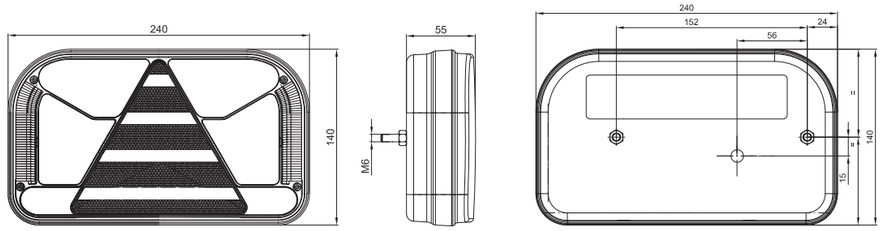

stop light / red
rear fog light / blue
ground /white / white
reversing light / grey
rear position light / black (brown)

direction indicator / yellow (green)

ID/EAN	Photo	Description	Unit pack		Multipack / carton			Multipack / pallet		
			qty.	kg	qty.	cm	kg	qty.	cm	kg
FT-170 P NT LED 5907556009264		Universal LED rear lamp 12-36V, 6-functional, right without number plate light, 1 m cable.	1	0.94	20	59x39x29	18.80	400	120x80x165	401.00
FT-170 P NT LED AMP 7PIN 5907556009592		Universal LED rear lamp 12-36V, 6-functional, right without number plate light, 7 PIN AMP connector.	1	0.88	20	59x39x29	17.60	400	120x80x165	377.00
FT-170 P NT LED BAJONET 6PIN 5907556009295		Universal LED rear lamp 12-36V, 6-functional, right without number plate light, 6 PIN bayonet connector.	1	0.91	20	59x39x29	18.20	400	120x80x165	389.00
FT-170 P NT LED SPK 5907556009349		Universal LED rear lamp 12-36V, 4-functional, right without number plate light. (stop/ position/ indicator/ reflector), 1 m cable.	1	0.94	20	59x39x29	18.80	400	120x80x165	401.00
FT-170 P NT LED SPK BAJONET 5PIN 5907556003262		Universal LED rear lamp 12-36V, 4-functional, right without number plate light. (stop/ position/ indicator/ reflector), 5 PIN Bayonet connector.	1	0.91	20	59x39x29	18.20	400	120x80x165	389.00
FT-170 P NT LED SPKCOF 5907556009356		Universal LED rear lamp - 12-36V, 5-functional, right without number plate light. (stop/ position/ indicator/ reversing light/ reflector), 1 m cable.	1	0.94	20	59x39x29	18.80	400	120x80x165	401.00
FT-170 P NT LED SPKCOF BAJONET 5PIN 5907556009639		Universal LED rear lamp - 12-36V, 5-functional, right without number plate light. (stop/ position/ indicator/ reversing light/ reflector), 5PIN Bayonet connector.	1	0.91	20	59x39x29	18.20	400	120x80x165	389.00
FT-170 P TB LED 5907556006744		Universal LED rear lamp 12-36V, 7-functional, right with side number plate light, 1 m cable.	1	0.94	20	59x39x29	18.80	400	120x80x165	401.00

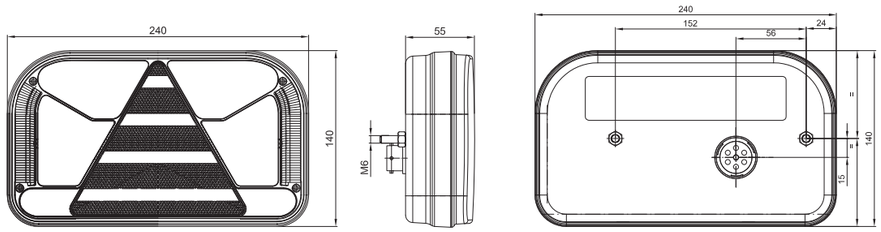

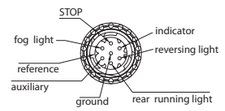

ID/EAN	Photo	Description	Unit pack		Multipack / carton			Multipack / pallet		
			qty.	kg	qty.	cm	kg	qty.	cm	kg
FT-170 P TB LED AMP 7PIN 5907556009653		Universal LED rear lamp 12-36V, 7-functional, right with side number plate light, 7 PIN AMP connector.	1	0.88	20	59x39x29	17.60	400	120x80x165	377.00
FT-170 P TB LED BAJONET 6PIN 5907556007581		Universal LED rear lamp 12-36V, 7-functional, right with side number plate light, 6PIN Bayonet connector.	1	0.91	20	59x39x29	18.20	400	120x80x165	389.00
FT-170 P TB LED SPK 5907556009363		Universal LED rear lamp 12-36V, 5-functional, right with side number plate light. (stop/ position/ indicator/ reflector), 1 m cable.	1	0.94	20	59x39x29	18.80	400	120x80x165	401.00
FT-170 P TB LED SPKCOF 5907556009370		Universal LED rear lamp 12-36V, 6-functional, right with side number plate light, (stop/ position/ indicator/ reversing light/ reflector), 1 m cable.	1	0.94	20	59x39x29	18.80	400	120x80x165	401.00
FT-170 P TB LED SPKCOF BAJONET 5PIN 5907556009615		Universal LED rear lamp 12-36V, 6-functional, right with side number plate light, (stop/ position/ indicator/ reversing light/ reflector), 5PIN Bayonet connector.	1	0.91	20	59x39x29	18.20	400	120x80x165	389.00
FT-170 P TB LED SPKPM BAJONET 5PIN 5907556008397		Universal LED rear lamp 12-36V, 6-functional, right with side number plate light, (stop/ position/ indicator/ fog light/ reflector), 5PIN Bayonet connector.	1	0.91	20	59x39x29	18.20	400	120x80x165	389.00
FT-170 P TD LED 5907556009219		Universal LED rear lamp, 7-functional, right with bottom number plate light, 1 m cable.	1	0.94	20	59x39x29	18.80	400	120x80x165	401.00
FT-170 P TD LED BAJONET 6PIN 5907556009226		Universal LED rear lamp, 7-functional, right with bottom number plate light, 6PIN Bayonet connector	1	0.91	20	59x39x29	18.20	400	120x80x165	389.00

WWW

VIDEO

FT-130 PM LED

FT-130 COF LED

EMC E 9

6-functional universal **LED** rear lamp - low power consumption
- european homologation **E9**
- ElectroMagnetic Compatibility **(EMC)** homologation
- shock-resistance – **PC** lampshade
- reverse polarity protection system

Lamp functions:
- rear running light
- number plate light homologated on an universal performance 34.4 mm<<X>>102.2 mm
- **STOP** light
- indicator
- fog light **(FT-130 PM LED)** or reversing **(FT-130 COF LED)** light (depending on the product version)
- reflector

Technical specification:
- supply voltage: **12–36V DC**
- operating temperature: **–40°C** to **+55°C**
- lamp is resistant to any weather conditions
- lamp is fully airtight

Power consumption:
- rear running light + number plate light **– 12V/ 24V = 0.25/ 0.21A**
- STOP light – **12V/ 24V = 0.08A/0.08A**
- indicator – **12V/ 24V = 0.11A/0.11A**
- fog light – **12V/ 24V = 0.12A/ 0.6A**
- reversing light – **12V/ 24V = 0.28A/ 0.14A**

Power consumption / Rated power:
- rear running light + number plate light – **12/ 24V = 3W/ 5W**
- STOP light –**12V/ 24V = 1W/ 2W**
- indicator – **12V/ 24V = 1.5W/ 3W**
- fog light – **12V/ 24V = 1.5W/1.5W**
- reversing light – **12/ 24V = 3.5W/3.5W**

FT-130 COF BAJONET

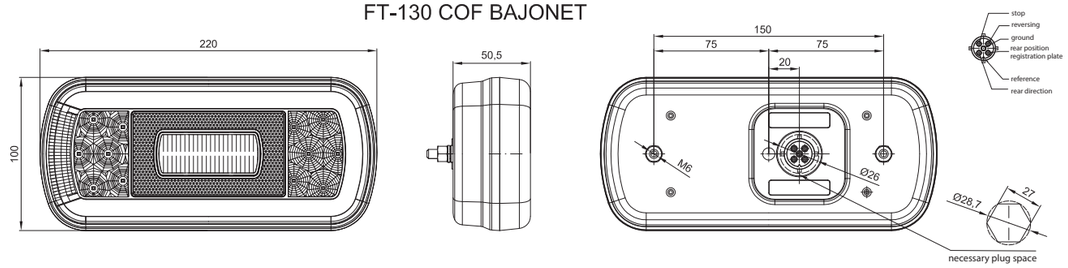

FT-130 COF

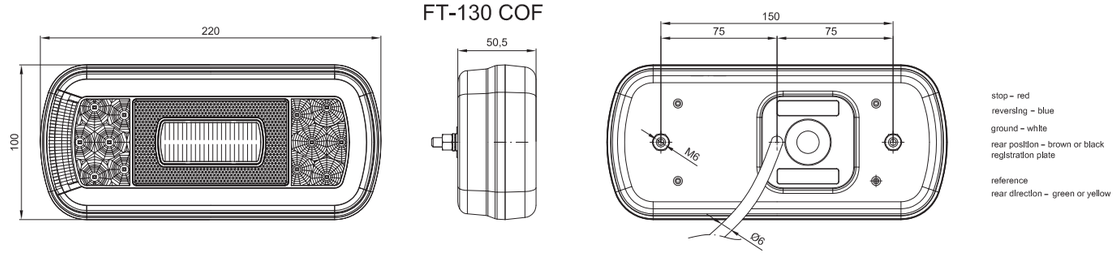

FT-130 PM

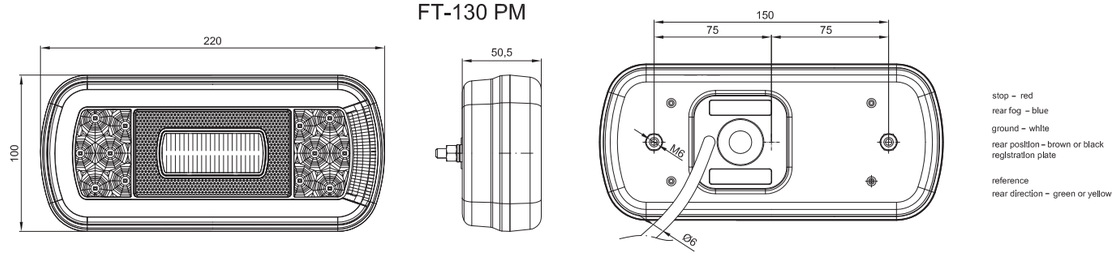

STOP LT LED

ID/EAN	Photo	Description	Unit pack		Multipack / carton			Multipack / pallet		
			qty.	kg	qty.	cm	kg	qty.	cm	kg
FT-130 PM LED 5907556008168		6-functional LED rear lamp with the position, fog, STOP, an indicator and a number plate lights with reflector, 1 m cable.	1	0.26	34	59x39x29	8.84	680	120x80x165	201.80
FT-130 COF LED 5907556008182		6-functional LED rear lamp with the position, reversing, STOP, an indicator and a number plate lights with reflector, 1 m cable.	1	0.26	34	59x39x29	8.84	680	120x80x165	201.80
FT-130 PM LED BAJONET 5907556008175		6-functional LED rear lamp with the position, fog, STOP, an indicator and a number plate lights with reflector, 5PIN Bayonet connector.	1	0.23	34	59x39x29	7.82	680	120x80x165	181.40
FT-130 COF LED BAJONET 5907556008199		6-functional LED rear lamp with the position, reversing, STOP, an indicator and a number plate lights and reflector, 5PIN Bayonet connector.	1	0.23	34	59x39x29	7.82	680	120x80x165	181.40
FT-130 NT PM LED 5907556008274		5-functional LED rear lamp with the position, fog, STOP, an indicator lights, without a number plate light with reflector, 1 m cable.	1	0.26	34	59x39x29	8.84	680	120x80x165	201.80
FT-130 NT COF LED 5907556008250		5-functional LED rear lamp with the position, reversing, STOP, an indicator lights without a number plate light with reflector, 1 m cable.	1	0.26	34	59x39x29	8.84	680	120x80x165	201.80
FT-130 NT PM LED BAJONET 5907556008281		5-functional LED rear lamp with the position, fog, STOP, an indicator lights without a number plate lights with reflector, 5PIN Bayonet connector.	1	0.23	34	59x39x29	7.82	680	120x80x165	181.40
FT-130 NT COF LED BAJONET 5907556008267		5-functional LED rear lamp with the position, reversing, STOP, an indicator lights without a number plate lights with reflector, 5PIN Bayonet connector.	1	0.23	34	59x39x29	7.82	680	120x80x165	181.40

Universal LED rear lamps

VIDEO

WWW

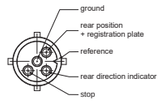

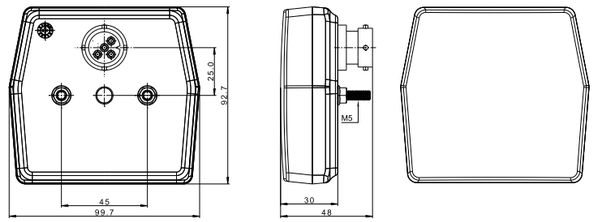

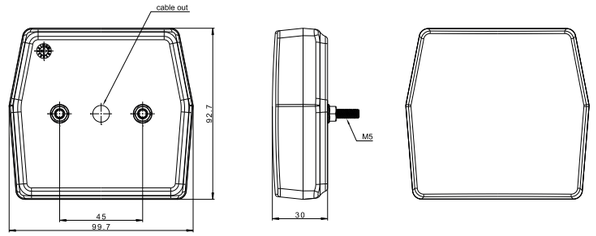

EMC E 9

Universal **LED** rear lamp – low power consumption
- european **E9** homologation
- ElectroMagnetic Compatibility – **EMC** certificate
- shock-resistance – **PC** lampshade
- reverse polarity protection system

Lamp functions:
- rear position light
- number plate light
- STOP light
- indicator

Technical specification:
- supply voltage: **12–15V DC**
- operating temperature: **–40°C** to **+55°C**
- lamp is resistant to any weather conditions
- lamp is fully airtight

Power consumption:
- rear position light + license plate light: **12V = 0.1A**
- version without number plate light: **12V = 0.05A**
- STOP light **12V = 0.2A**
- indicator **12V = 0.2A**

Power consumption / Rated power:
- rear position light + license plate light: **12V = 1.2W**
- version without number plate light: **12V = 0.6W**
- STOP light **12V = 2.4W**
- indicator **12V = 2.4W**

ID/EAN	Photo	Description	Unit pack		Multipack / carton			Multipack / pallet		
			qty.	kg	qty.	cm	kg	qty.	cm	kg
FT-222 LED 5907556015203		Universal LED rear lamp 12V, 3-functional STOP/POSITIONAL/INDICATOR, 1 m cable.	1	0.228	108	59x39x29	24.624	2160	120x80x165	517.48
FT-222 LED BAJONET 5907556015210		Universal LED rear lamp 12V, 3-functional STOP/POSITIONAL/INDICATOR, 5PIN Bayonet connector.	1	0.204	108	59x39x29	22.032	2160	120x80x165	465.64
FT-222 T LED 5907556015395		Universal LED rear lamp 12V, 4-functional STOP/POSITIONAL/INDICATOR with number plate, 1 m cable.	1	0.230	108	59x39x29	24.84	2160	120x80x165	521.80
FT-222 T LED BAJONET 5907556015401		Universal LED rear lamp 12V, 4-functional STOP/POSITIONAL/INDICATOR with number plate, 5PIN Bayonet connector.	1	0.206	108	59x39x29	22.248	2160	120x80x165	469.96

FT-120 LED

FT-121 LED

FT-122 LED

WWW

EMC E 9

3-functional universal **LED** rear lamp – low power consumption
- european **E9** homologation
- the lamp is homologated to be mounted horizontally and vertically as well
- ElectroMagnetic Compatibility – **EMC** certificate
- shock-resistance – **PC** lampshade
- reverse polarity protection system

Lamp functions:
- rear position light
- STOP light
- indicator

Technical specification:
- supply voltage: **12–36V DC**
- operating temperature: **–40°C** to **+55°C**
- lamp is resistant to any weather conditions
- lamp is fully airtight

Power consumption:
- rear position light **12V/24V = 0.06A/0.06A**
- STOP light **12V/24V = 0.08A/0.08A**
- indicator **12V/24V = 0.08A/0.08A**

Power consumption / Rated power:
- rear position light **12V/24V = 0.75W/1.5W**
- STOP light **12V/24V = 1W/2W**
- indicator **12V/24V = 1W/2W**

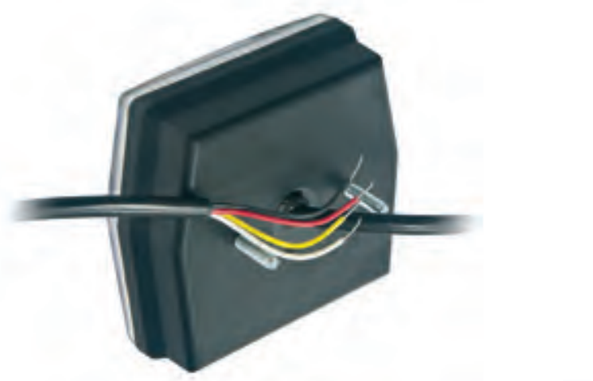

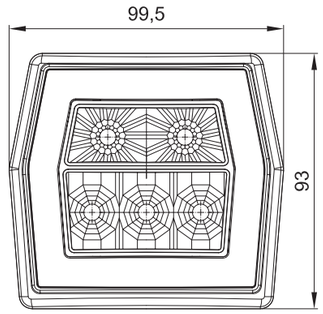

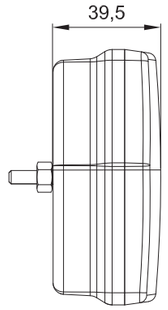

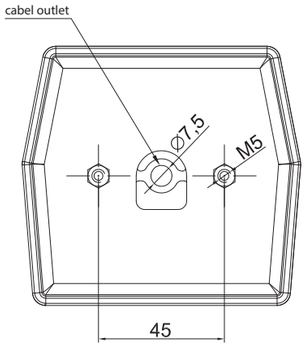

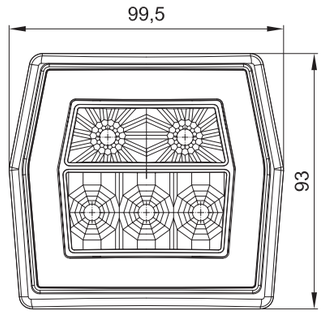

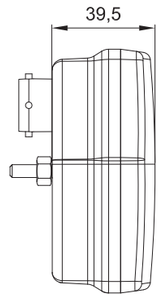

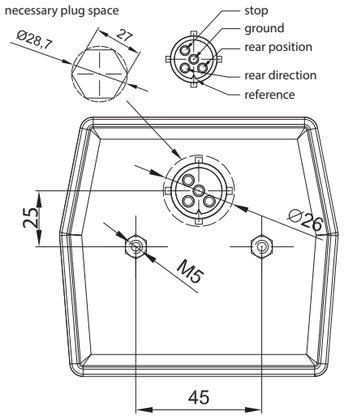

ID/EAN	Photo	Description	Unit pack		Multipack / carton			Multipack / pallet		
			qty.	kg	qty.	cm	kg	qty.	cm	kg
FT-120 LED 5907556007604		Universal LED rear lamp 12-36V, 3-functional, colorless lampshade, 1 m cable.	1	0.26	108	59x39x29	28.08	2160	120x80x165	586.60
FT-120 LED BAJONET 5907556007611		Universal LED rear lamp 12-36V, 3-functional, colorless lampshade, 5PIN BAYONET connector.	1	0,21	108	59x39x29	22,68	2160	120x80x165	478,60
FT-121 LED 5907556007628		Universal LED rear lamp 12-36V, 3-functional, colorless lampshade with a yellow filter of an indicator, 1 m cable.	1	0.26	108	59x39x29	28.08	2160	120x80x165	586.60
FT-121 LED BAJONET 5907556007635		Universal LED rear lamp 12-36V, 3-functional, colorless lampshade with a yellow filter of an indicator, 5PIN BAYONET connector.	1	0.21	108	59x39x29	22.68	2160	120x80x165	478.60
FT-122 LED 5907556007642		Universal LED rear lamp 12-36V, 3-functional, colorless lampshade with a red filter of a STOP light and a yellow filter of an indicator, 1 m cable.	1	0.26	108	59x39x29	28.08	2160	120x80x165	586.60
FT-122 LED BAJONET 5907556007659		Universal LED rear lamp 12-36V, 3-functional, colorless lampshade with a red filter of a STOP light and yellow of an indicator, 5PIN BAYONET connector.	1	0.21	108	59x39x29	22.68	2160	120x80x165	478.60

FT-120 T LED

FT-121 T LED

FT-122 LED

WWW

EMC E 9

4-functional universal **LED** rear lamp – low power consumption
- european **E9** homologation
- the lamp is homologated to be mounted horizontally and vertically as well
- ElectroMagnetic Compatibility – **EMC** certificate
- shock-resistance – **PC** lampshade
- reverse polarity protection system

Lamp functions:
- rear position light
- STOP light
- indicator
- number plate light

Technical specification:
- supply voltage: **12–36V DC**
- operating temperature: **–40°C** to **+55°C**
- lamp is resistant to any weather conditions
- lamp is fully airtight

Power consumption:
- rear position light + license plate light **12V/24V = 0.14A/0.14A**
- STOP light **12V/24V = 0.08A/0.08A**
- indicator **12V/24V = 0.08A/0.08A**

Power consumption / Rated power:
- rear position light + license plate light **12V/24V = 1.65W/3.3W**
- STOP light **12V/24V = 1W/2W**
- indicator **12V/24V = 1W/2W**

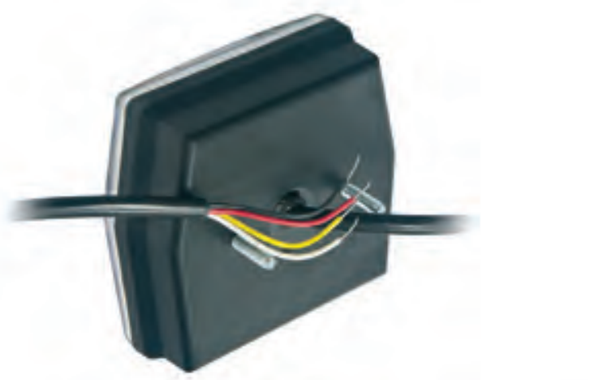

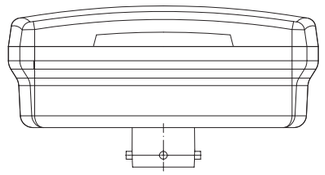

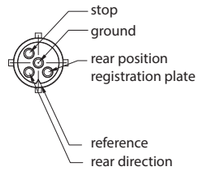

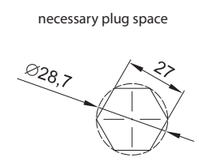

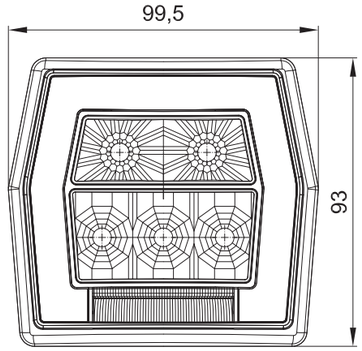

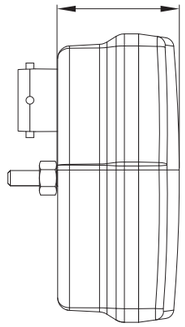

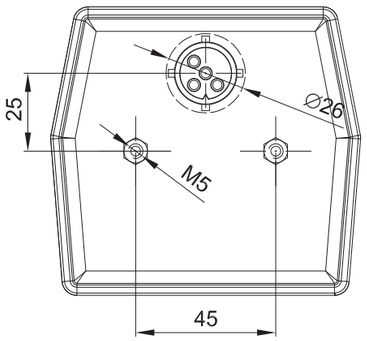

STOP LT LED

ID/EAN	Photo	Description	Unit pack qty.	Unit pack kg	Multipack / carton qty.	Multipack / carton cm	Multipack / carton kg	Multipack / pallet qty.	Multipack / pallet cm	Multipack / pallet kg
FT-120 T LED 5907556008106		Universal LED rear lamp 12-36V, 4-functional with a number plate light, colorless lampshade, 1 m cable.	1	0.26	108	59x39x29	28.08	2160	120x80x165	586.60
FT-120 T LED BAJONET 5907556008113		Universal LED rear lamp 12-36V, 4-functional with a number plate light, colorless lampshade, 5PIN BAYONET connector.	1	0.21	108	59x39x29	22.68	2160	120x80x165	478.60
FT-121 T LED 5907556008120		Universal LED rear lamp 12-36V, 4-functional with a number plate light, colorless lampshade with a yellow filter of an indicator, 1 m cable.	1	0.26	108	59x39x29	28.08	2160	120x80x165	586.60
FT-121 T LED BAJONET 5907556008137		Universal LED rear lamp 12-36V, 4-functional with a number plate light, colorless lampshade with a yellow filter of an indicator, 5PIN BAYONET connector.	1	0.21	108	59x39x29	22.68	2160	120x80x165	478.60
FT-122 T LED 5907556008144		Universal LED rear lamp 12-36V, 4-functional with a number plate light, colorless lampshade with a red filter of a STOP light and a yellow filter of an indicator, 1 m cable.	1	0.26	108	59x39x29	28.08	2160	120x80x165	586.60
FT-122 T LED BAJONET 5907556008151		Universal LED rear lamp 12-36V, 4-functional with a number plate light, colorless lampshade with a red filter of a STOP light and yellow filter of an indicator, 5PIN BAYONET connector.	1	0.21	108	59x39x29	22.68	2160	120x80x165	478.60

Universal LED rear lamps

WWW

VIDEO

EMC E 9

3-functional universal **LED** rear lamp – low power consumption
- european **E9** homologation
- ElectroMagnetic Compatibility – **EMC** certificate
- shock-resistance – **PC** lampshade
- reverse polarity protection system

Lamp functions:
- rear position light
- STOP light
- indicator

Technical specification:
- supply voltage: **12–36V DC**
- operating temperature: **–40°C** to **+55°C**
- lamp is resistant to any weather conditions
- lamp is fully airtight

Power consumption:
- rear position light **12V/24V = 0.1A/0.1A**
- STOP light **12V/24V = 0.08A/0.08A**
- indicator **12V/24V = 0.08A/0.08A**

Power consumption / Rated power:
- rear position light **12V/24V = 1.2W/2.4W**
- STOP light **12V/24V = 1W/2W**
- indicator **12V/24V = 1W/2W**

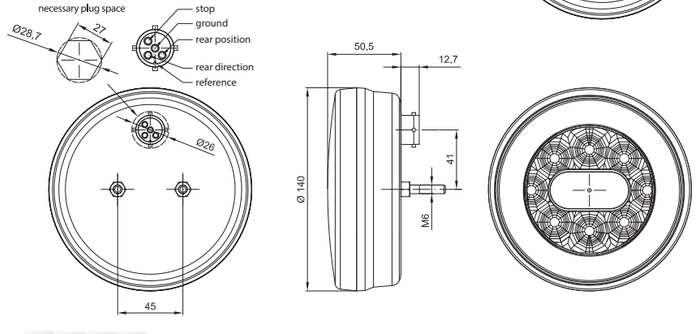

ID/EAN	Photo	Description	Unit pack		Multipack / carton			Multipack / pallet		
			qty.	kg	qty.	cm	kg	qty.	cm	kg
FT-110 LED 5907556007260		Universal LED 3-functional rear lamp 12/ 24V, round, 1 m wiring loom.	1	0.50	40	59x39x29	20.00	800	120x80x165	425.00
FT-110 LED BAJONET 5907556007277		Universal 3-functional LED rear lamp 12/ 24V, round, 5 PIN Bayonet connector.	1	0.422	40	59x39x29	16.80	800	120x80x165	337.60

WWW

VIDEO

EMC E 9

ASSEMBLY
Minimum lamps amount per one side – 2 pieces

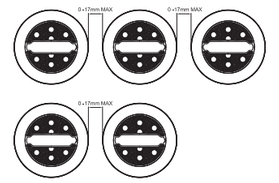

3-functional universal LED rear lamp – low power consumption
- european **E9** homologation
- ElectroMagnetic Compatibility – **EMC** certificate
- shock-resistance – **PC** lampshade
- reverse polarity protection system

Lamp functions:
- rear position light
- STOP light
- indicator

Technical specification:
- supply voltage: **12–36V DC**
- operating temperature: **–40°C** to **+55°C**
- lamp is resistant to any weather conditions
- lamp is fully airtight

Power consumption:
- rear position light **12V/24V = 0.05A/0.05A**
- STOP light **12V/24V = 0.08A/0.08A**
- indicator **12V/24V = 0.08A/0.08A**

Power consumption / Rated power:
- rear position light **12V/24V = 0.6W/1.2W**
- STOP light **12V/24V = 1W/2W**
- indicator **12V/24V = 1W/2W**

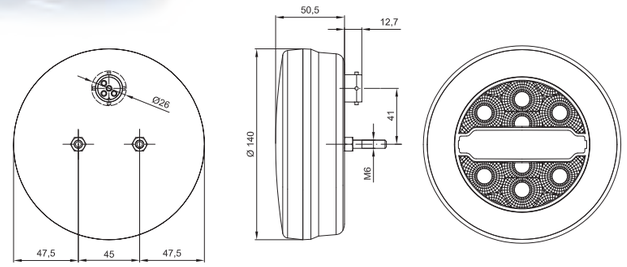

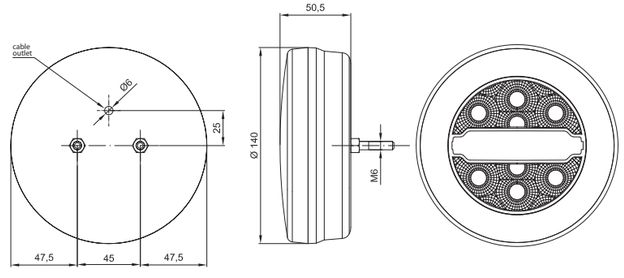

ID/EAN	Photo	Description	Unit pack		Multipack / carton			Multipack / pallet		
			qty.	kg	qty.	cm	kg	qty.	cm	kg
FT-113 LED 5907556011205		Universal LED 3-functional rear lamp 12/ 24V, round for separate mounting (one lamp per one side), rear position, stop, indicator lights.	1	0.50	40	59x39x29	20.00	800	120x80x165	425.00
FT-113 LED BAJONET 5907556011212	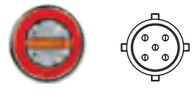	Universal LED 3-functional rear lamp 12/ 24V, round for separate mounting (one lamp per one side) with 5PIN bayonet connector, rear position, stop, indicator lights.	1	0.422	40	59x39x29	16.80	800	120x80x165	337.60
FT-113 Y LED 5907556010536		Universal LED 3-functional rear lamp 12/ 24V, round for serial mounting (2 or 3 lamps in row), rear position, stop, indicator lights.	1	0.50	40	59x39x29	20.00	800	120x80x165	425.00
FT-113 Y LED BAJONET 5907556010581		Universal LED 3-functional rear lamp 12/ 24V, round for serial mounting (2 or 3 lamps in row), with 5PIN bayonet connector, rear position, stop, indicator lights.	1	0.422	40	59x39x29	16.80	800	120x80x165	337.60

Rear lamp with a triangular reflector for trailers

WWW

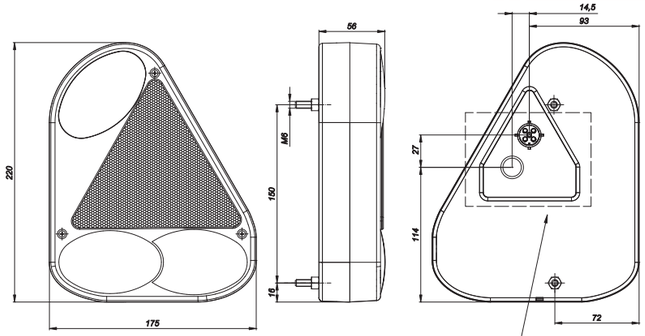

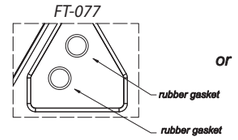

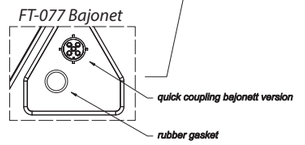

STOP CAT

ID/EAN	Photo	Description	Unit pack		Multipack / carton			Multipack / pallet		
			qty.	kg	qty.	cm	kg	qty.	cm	kg
FT-077 LPM 5907556003767		Left lamp with a fog light.	1	0.50	25	59x39x29	12.50	500	120x80x165	275.00
FT-077 PCOF 5907556003798		Right lamp with a reversing light.	1	0.50	25	59x39x29	12.50	500	120x80x165	275.00
FT-077 LCOF 5907556003774		Left lamp with a reversing light.	1	0.50	25	59x39x29	12.50	500	120x80x165	275.00
FT-077 PPM 5907556003781		Right lamp with a fog light.	1	0.50	25	59x39x29	12.50	500	120x80x165	275.00
FT-077 LPM BAJONET 5907556003804		Left lamp with a fog light and a bayonet plug. All cables and bulbs included.	1	0.55	25	59x39x29	13.75	500	120x80x165	300.00
FT-077 PCOF BAJONET 5907556003835		Right lamp with a reversing light and a bayonet plug. All cables and bulbs included.	1	0.55	25	59x39x29	13.75	500	120x80x165	300.00
FT-077 LCOF BAJONET 5907556003811		Left lamp with a reversing light and a bayonet plug. All cables and bulbs included.	1	0.55	25	59x39x29	13.75	500	120x80x165	300.00
FT-077 PPM BAJONET 5907556003828		Right lamp with a fog light and a bayonet plug. All cables and bulbs included.	1	0.55	25	59x39x29	13.75	500	120x80x165	300.00
FT-077 KLPM 5907556003842		Left lampshade with a fog light.	1	0.24	50	59x39x29	12.00	720	120x80x165	197.80
FT-077 KPCOF 5907556003873		Right lampshade with a reversing light.	1	0.24	50	59x39x29	12.00	720	120x80x165	197.80
FT-077 KLCOF 5907556003859		Left lampshade with a reversing light.	1	0.24	50	59x39x29	12.00	720	120x80x165	197.80
FT-077 KPPM 5907556003866		Right lampshade with a fog light.	1	0.24	50	59x39x29	12.00	720	120x80x165	197.80

Rear lamp with a triangular reflector for trailers

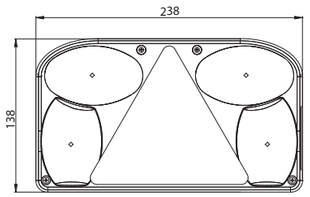

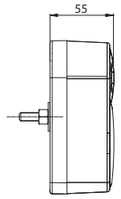

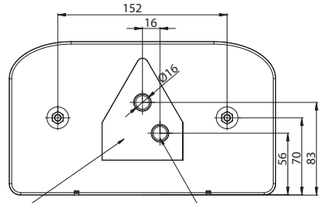

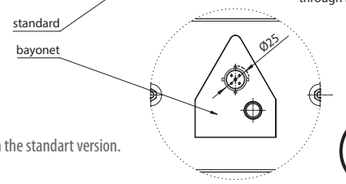

WWW

Attention!
Bayonet socket is not included in the standart version.

E 9

STOP CAT LT

ID/EAN	Photo	Description	Unit pack		Multipack / carton			Multipack / pallet		
			qty.	kg	qty.	cm	kg	qty.	cm	kg
FT-088 LPM 5907556002456		Left lamp with a fog light and a number plate light.	1	0.50	25	59x39x29	12.50	500	120x80x165	275.00
FT-088 PCOF 5907556002487		Right rear lamp with a reversing light and a number plate light.	1	0.50	25	59x39x29	12.50	500	120x80x165	275.00
FT-088 LCOF 5907556002425		Left rear lamp with a reversing light and a number plate light.	1	0.50	25	59x39x29	12.50	500	120x80x165	275.00
FT-088 PPM 5907556002517	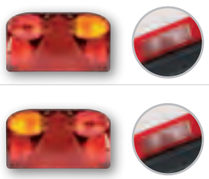	Right rear lamp with a fog light and a number plate light.	1	0.50	25	59x39x29	12.50	500	120x80x165	275.00
FT-088 LPM BAJONET 5907556002463		Left rear lamp with a fog light and a bayonet connector (5 PIN). All cables and bulbs included.	1	0.55	25	59x39x29	13.75	500	120x80x165	300.00
FT-088 PCOF BAJONET 5907556002494		Right rear lamp with a reversing light and a bayonet connector (5 PIN). All cables and bulbs included.	1	0.55	25	59x39x29	13.75	500	120x80x165	300.00
FT-088 LCOF BAJONET 5907556002432		Left rear lamp with a reversing light and a bayonet connector. All cables and bulbs included.	1	0.55	25	59x39x29	13.75	500	120x80x165	300.00
FT-088 PPM BAJONET 5907556002524		Right rear lamp with a fog light and a bayonet connector. All cables and bulbs included.	1	0.55	25	59x39x29	13.75	500	120x80x165	300.00
FT-088 KLPM 5907556002395		Left lampshade with a fog light.	1	0.24	40	59x39x29	9.60	720	120x80x165	197.80
FT-088 KPCOF 5907556002401		Right lampshade with a reversing light.	1	0.24	40	59x39x29	9.60	720	120x80x165	197.80
FT-088 KPPM 5907556002418		Right lampshade with a fog light.	1	0.24	40	59x39x29	9.60	720	120x80x165	197.80
FT-088 KLCOF 5907556002388		Left lampshade with a reversing light.	1	0.24	40	59x39x29	9.60	720	120x80x165	197.80

Rear lamp with a triangular reflector for trailers

WWW

E 9

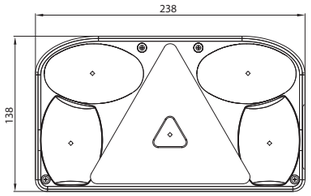

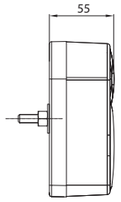

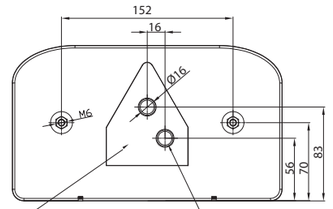

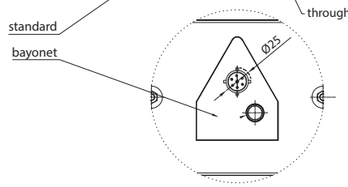

Rear combination lamp with an indicator built-in triangular reflector for trailers with all functions:
- position light,
- STOP light,
- indicator,
- fog light,
- reversing light.

Attention!
Bayonet socket is not included in the standart version.

STOP CAT LT

ID/EAN	Photo	Description	Unit pack		Multipack / carton			Multipack / pallet		
			qty.	kg	qty.	cm	kg	qty.	cm	kg
FT-089 L 5907556006652		Left rear lamp with a fog light, reversing light and a number plate light.	1	0.54	25	59x39x29	13.50	500	120x80x165	295.00
FT-089 P 5907556006669		Right rear lamp with a fog light, reversing light and a number plate light.	1	0.54	25	59x39x29	13.50	500	120x80x165	295.00
FT-089 P PK 5907556006676		Right rear lamp with a reversing light and a number plate light.	1	0.51	25	59x39x29	12.75	500	120x80x165	280.00
FT-089 L BAJONET 6PIN 5907556007796		Left rear lamp with a fog light, reversing light, number plate light and a 6 PIN bayonet connector. All cables and bulbs included.	1	0.59	25	59x39x29	14.75	500	120x80x165	320.00
FT-089 P BAJONET 6PIN 5907556007802		Right rear lamp with a fog light, reversing light, number plate light and a 6 PIN bayonet connector. All cables and bulbs included.	1	0.59	25	59x39x29	14.75	500	120x80x165	320.00
FT-089 L AMP 7PIN 5907556006683		Left rear lamp with a fog light, reversing light, number plate light and a 7 PIN AMP connector. All cables and bulbs included.	1	0.60	25	59x39x29	15.00	500	120x80x165	325.00
FT-089 P AMP 7PIN 5907556006690		Right rear lamp with a fog light, reversing light, number plate light and a 7 PIN AMP connector. All cables and bulbs included.	1	0.60	25	59x39x29	15.00	500	120x80x165	325.00
FT-089 P PK BAJONET 5PIN 5907556006706		Right rear lamp with a reversing light, number plate light and a 5 PIN bayonet connector. All cables and bulbs included.	1	0.55	25	59x39x29	13.75	500	120x80x165	300.00
FT-089 KL 5907556006713	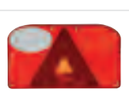	Left lampshade with a fog light and a reversing light.	1	0.24	40	59x39x29	9.60	720	120x80x165	197.80
FT-089 KP 5907556006720	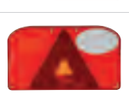	Right lampshade with a fog light and a reversing light.	1	0.24	40	59x39x29	9.60	720	120x80x165	197.80

WWW

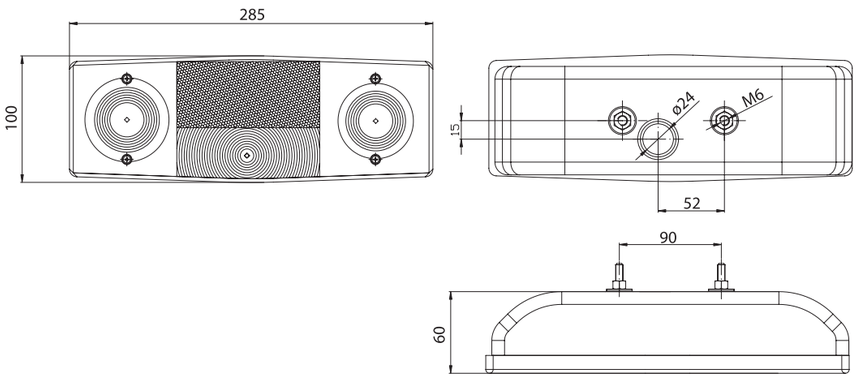

ID/EAN	Photo	Description	Unit pack		Multipack / carton			Multipack / pallet		
			qty.	kg	qty.	cm	kg	qty.	cm	kg
551 L		Left rear lamp with a number plate light.	1	0.43	32	59x39x29	13.76	640	120x80x165	280.20
551 P		Right lamp.	1	0.43	32	59x39x29	13.76	640	120x80x165	280.20
551 KL		Left lampshade.	1	0.16	50	26x30x31	8.00	1000	120x80x165	185.00
551 KP		Right lampshade.	1	0.16	50	26x30x31	8.00	1000	120x80x165	185.00

WWW

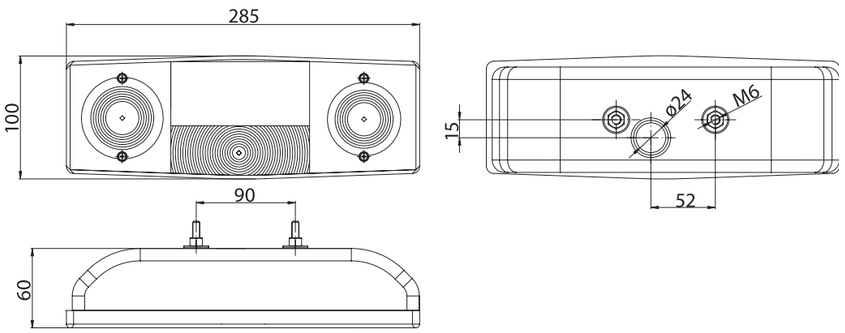

ID	Photo	Description	Unit pack		Multipack / carton			Multipack / pallet		
			qty.	kg	qty.	cm	kg	qty.	cm	kg
549 L		Left rear lamp with a number plate light.	1	0.41	32	59x39x29	13.12	640	120x80x165	287.40
549 P		Right rear lamp.	1	0.41	32	59x39x29	13.12	640	120x80x165	287.40
549 KL		Left lampshade.	1	0.13	50	26x30x31	6.50	1000	120x80x165	155.00
549 KP		Right lampshade.	1	0.13	50	26x30x31	6.50	1000	120x80x165	155.00

MD-016

Round universal rear lamp for semi-trailers

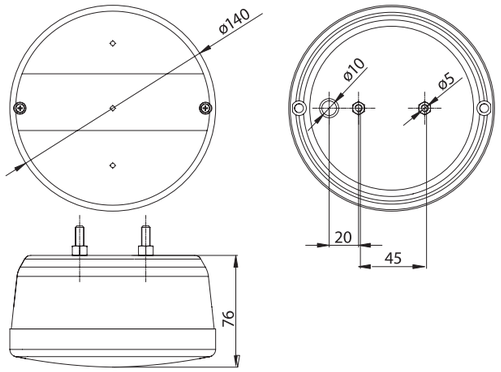

WWW

E20

ID	Photo	Description	Unit pack		Multipack / carton			Multipack / pallet		
			qty.	kg	qty.	cm	kg	qty.	cm	kg
MD-016 L		Left rear lamp with a number plate light.	1	0.28	38	59x39x29	10.64	760	120x80x165	237.80
MD-016 P		Right rear lamp.	1	0.28	38	59x39x29	10.64	760	120x80x165	237.80
MD-016 K		Universal lampshade.	1	0.10	100	59x39x29	10.00	2000	120x80x165	225.00

FT-007

Rear lamp for semi-trailers

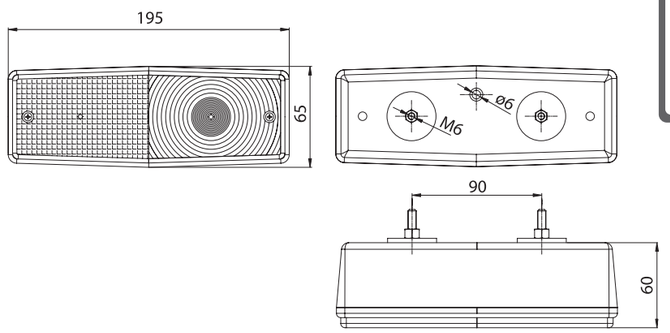

WWW

ID/EAN	Photo	Description	Unit pack		Multipack / carton			Multipack / pallet		
			qty.	kg	qty.	cm	kg	qty.	cm	kg
FT-007 5907556001152		Universal rear lamp (MF type).	1	0.25	64	59x39x29	16.00	1280	120x80x165	345.00
FT-007 K 5907556001169		Lampshade.	10	0.71	250	59x39x29	17.75	5000	120x80x165	380.00

Universal rear lamp for trailers

MD-002

WWW

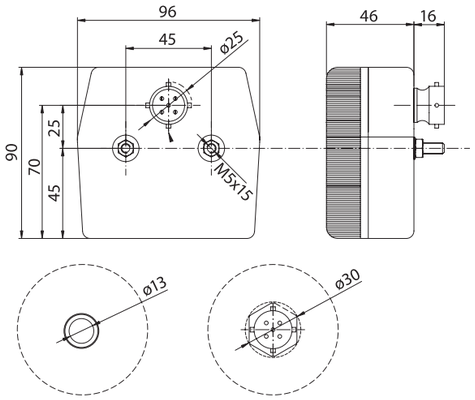

ID/EAN	Photo	Description	Unit pack		Multipack / carton			Multipack / pallet		
			qty.	kg	qty.	cm	kg	qty.	cm	kg
MD-002 L 5907556002784		Left rear lamp with a number plate light.	1	0.15	120	59x39x29	18.00	2400	120x80x165	385.00
MD-002 P 5907556002807		Right rear lamp without a number plate light.	1	0.15	120	59x39x29	18.00	2400	120x80x165	385.00
MD-002 L BAJONET 5907556002791		Left rear lamp with a number plate light and a 5PIN bayonet connector.	1	0.17	120	59x39x29	20.40	2400	120x80x165	433.00
MD-002 P BAJONET 5907556002814		Right rear lamp without a number plate light with a 5PIN bayonet connector.	1	0.17	120	59x39x29	20.40	2400	120x80x165	433.00
MD-002 K 5907556002777		Universal lampshade.	1	0.04	324	59x39x29	12.96	6480	120x80x165	264.20

Small LAMP COVER

The tail lamp cover is primarily used to protect the lamp's electrical connector with an electric bundle against harmful weather conditions such as: water, mud or road salt in winter conditions. The cover is made of high quality material, making it extremely durable.

Application of this product:

- will significantly extend the life of the lamp connector
- it will allow you to hide the excess wire inside the cover.

It can be mounted with rear lamps with mounting bolt spacing 150–152mm.

For Fristom lamps with Bayonet or AMP connector you can list the following products:

FT-277 LED	**FT-230 LED**	**FT-270 LED**	**FT-170 LED**
FT-130 LED	**FT-077**	**FT-088**	**FT-089**

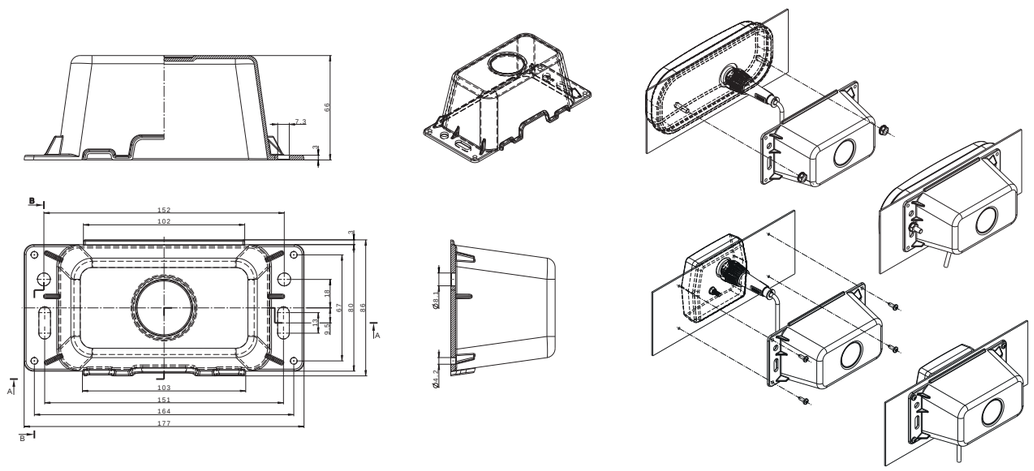

Big LAMP COVER

The tail lamp cover is primarily used to protect the lamp's electrical connector with an electric bundle against harmful weather conditions such as: water, mud or road salt in winter conditions. The cover is made of high quality material, making it extremely durable.

Application of this product:

- will significantly extend the life of the lamp connector
- it will allow you to hide the excess wire inside the cover.

It can be mounted with rear lamps with mounting bolt spacing 150–152mm.

For Fristom lamps with Bayonet or AMP connector you can list the following products:

FT-700 LED	**FT-600 LED**	**FT-610 LED**	**FT-500 LED**

*Lamp cover can also be used for lamps from manufacturers such as **ASPOECK** or **HELLA**.*

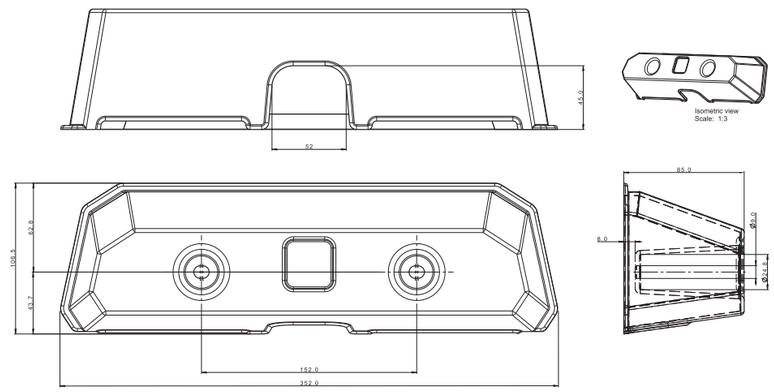

Third break LIGHT (STOP)

The third brake light
protects you from
the serious consequences
of a collision or road accident.

WWW

1-functional **LED** lamp – low power consumption
- ElectroMagnetic Compatibility – **EMC** certificate
- shock-resistance – **PC** lampshade
- optional polarity connection
- lamp is equipped with 2x075 mm^2 wire
- the vertical and horizontal assembly is possible by means of double-sided tape or/and two screws.

Lamp functions:
- lamp has a third break light function
- application: trailers; semi-trailers; special vehicles and others

Lamp parameters:
Universal supply voltage: **12–36V DC**
Operating temperature: **–40°C** to **+55°C**
Lamp is resistant to any weather conditions
Lamp is fully airthight

Power consumption:
- **12V/24V = 0.08A/0.08A**

Power consumption (rated power):
- **12V/24V = 1W/2W**

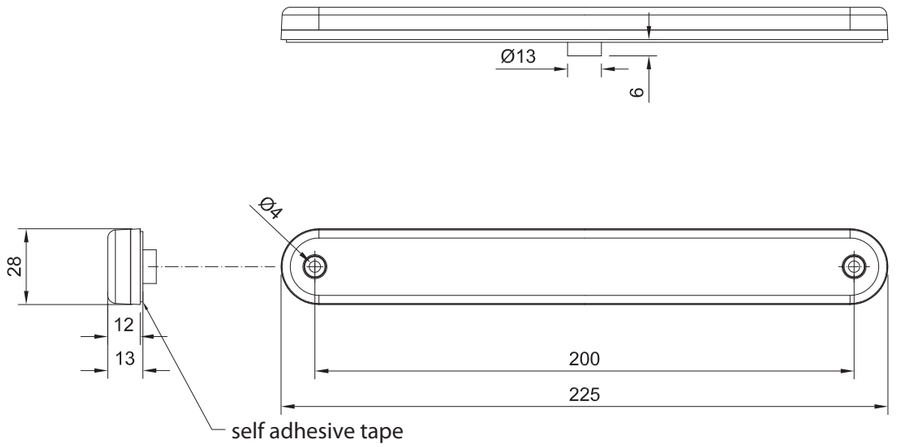

ID/EAN	Photo	Description	Unit pack		Multipack / carton			Multipack / pallet		
			qty.	kg	qty.	cm	kg	qty.	cm	kg
FT-190 LED 5907556011298		LED Third break light (STOP) with self-adhesive tape and 0.5 m wire.	1	0.08	200	59x39x29	16.00	4000	120x80x165	345.00
FT-190 LED M38 5907556011304		LED Third break light (STOP) with self-adhesive tape and 3.8 m wire.	1	0.202	130	59x39x29	26.26	3000	120x80x165	631.00

CLEARANCE *Lamps*

Clearance lamps are an indispensable type of vehicle lighting. They are used in trailers, car carriers and semi-trailers. They mark the **outer contour of the vehicle**, therefore they are mounted at the front, at the rear and on the sides of the vehicle.

LED Clearance lamps

◊ Standard length of the cable 0.5 m, 2x0.75 mm^2
QS075 – *Electrical connector enabling connection of the lamp to a 2x0.75 mm^2 diameter electrical installation*
QS150 – *Electrical connector enabling connection of the lamp to a 2x1.50 mm^2 diameter electrical installation*

◊ Nonstandard length of the cable (QS075, QS150) – on order.
Lead time is individually determined.

WWW

EMC E 9

3-functional **LED** end-outline marker with the rubber elastic bracket.
Eeuropean **E9** homologation
ElectroMagnetic Compatibility – **EMC** certificate

Lamp functions:
- white clearance front light
- red clearance rear light
- yellow clearance side light
- lamp is fully airtight

Technical specification:
- supply voltage: **12–36V DC**
- operating temperature: **– 40°C** to **+55°C**
- optional polarity connection

Power consumption:
- 12V/24V = 0.1A/0.1A

Power consumption / Rated power:
- 12V/24V = 1.2W/2.4W

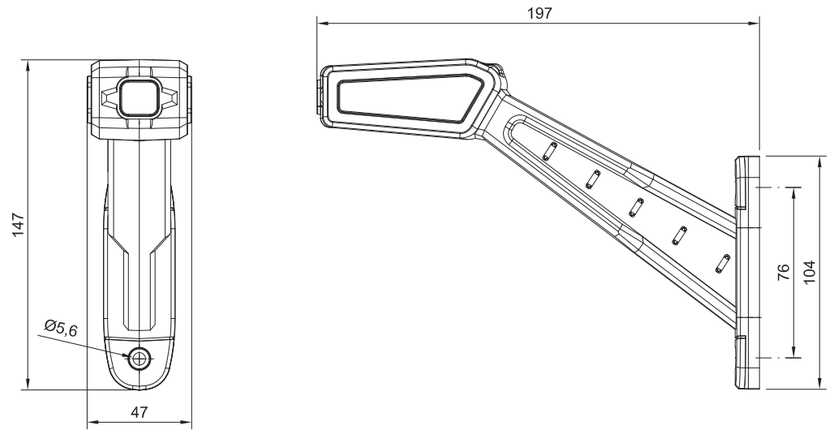

SM LED

ID/EAN	Photo		Description	Unit pack		Multipack / carton			Multipack / pallet		
				qty.	kg	qty.	cm	kg	qty.	cm	kg
FT-146 L LED 5907556016576			3-functional LED side marker, left, long, slanted rubber arm, 2x0.75 mm² cable 0.3 m long.	1	0.190	100	59x39x29	19.00	2000	120x80x165	405.00
FT-146 P LED 5907556016583			3-functional LED side marker, right, long, slanted rubber arm, 2x0.75 mm² cable 0.3 m long.	1	0.190	100	59x39x29	19.00	2000	120x80x165	405.00

WWW

EMC E 9

1-functional **LED** lamp
European homologation **E9** mark
ElectroMagnetic Compatibility – **EMC** certificate
Shockprrof lamp
The lamp connection polarity is optional
Easy assembling lamp
Unique light emission

*Can be mounted on the vehicle piping using an additional rubber, included in the set – **NEW in the offer**!*

Lamp Functions:
Depending on the color of the light:
- **front** position „A – approval after 360 rotation
- **rear** position „R1" – approval after 360 rotation
- **side** marker „SM1" – approval after 360 rotation

Lamp parameters:
- supply voltage range: **12-36V DC**
- working temperature: **–40°C do +55°C**
- lamp resistant to hard weather conditions
- lamp is fully airtight

Power consumption:
- 12V/24V = 0.03A/0.03A

Power consumption (rated power):
- 12V/24V = 0.4W/0.8W

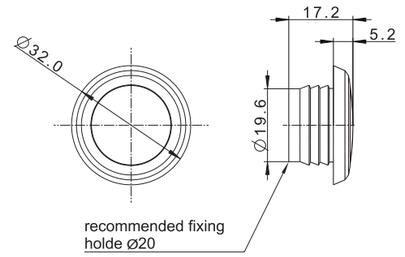

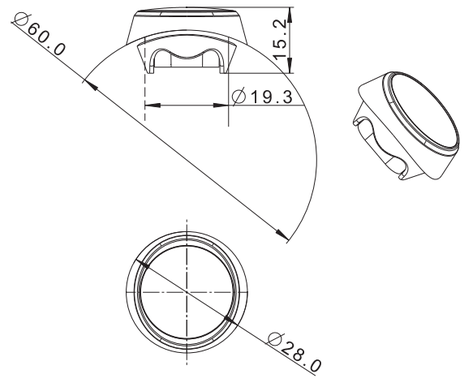

SM LED

ID/EAN	Photo		Description	Unit pack		Multipack / carton			Multipack / pallet		
				qty.	kg	qty.	cm	kg	qty.	cm	kg
FT-074 B LED 5907556015616			Clearance Lamp LED 12-36V, white, round, recessed, cable 0.15 m.	1			59x39x29			120x80x165	
FT-074 C LED 5907556015623			Clearance Lamp LED 12-36V, red, round, recessed, cable 0.15 m.	1			59x39x29			120x80x165	
FT-074 Z LED 5907556015630			Clearance Lamp LED 12-36V, yellow, round, recessed, cable 0.15 m.	1			59x39x29			120x80x165	

VIDEO

WWW

EMC E 9

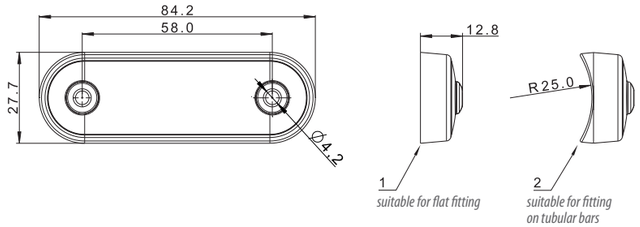

- 1-functional **LED** clearance lamp
- European **E9** homologation
- ElectroMagnetic Compatibility – **EMC** certificate
- Shock-resistance – **PC** lampshade
- Optional polarity connection
- This popular LED Marker Light fits neatly onto tubular stainless steel, commonly used on bars for Vans and Trucks
- Lamp is equiped with screw covers
- Not only stunning light emission but also catchy brightnes

Lamp functions:
Depending on the light color:
- **front** clearance light – horizontal and vertical approval
- **rear** clearance light – horizontal and vertical approval
- **side** clearance light – horizontal approval

Technical specification:
- supply voltage: **12–36V DC**
- operating temperature: **–40°C** to **+55°C**
- lamp is resistant to any weather conditions
- lamp is fully airtight

Power consumption:
- 12V/24V = 0.05A/0.05A

Power consumption / Rated power:
- 12V/24V = 0.6W/1.2W

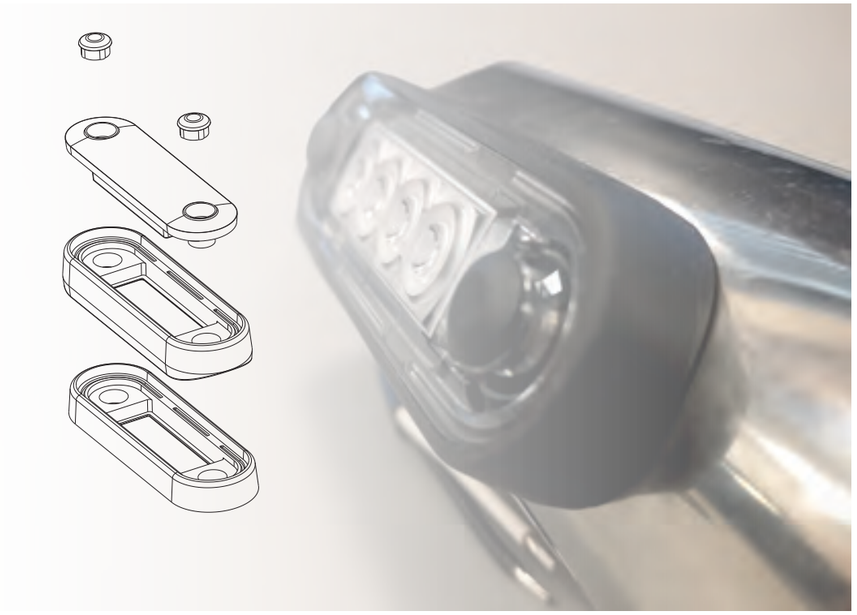

SM LED

ID/EAN	Photo		Description	Unit pack		Multipack / carton			Multipack / pallet		
				qty.	kg	qty.	cm	kg	qty.	cm	kg
FT-073 B LED 5907556015487			Clearance Lamp LED 12-36V, white, loom 0.5 m, with a flat and round black rubber gasket for a vehicle bullbars.	10	0.6	400	59x39x29	24.70	8000	120x80x165	505.00
FT-073 C LED 5907556015494			Clearance Lamp LED 12-36V, RED, loom 0.5 m, with a flat and round black rubber gasket for a vehicle bullbars.	10	0.6	400	59x39x29	24.70	8000	120x80x165	505.00
FT-073 Z LED 5907556015500			Clearance Lamp LED 12-36V, YELLOW, loom 0.5 m, with a flat and round black rubber gasket for a vehicle bullbars.	10	0.6	400	59x39x29	24.70	8000	120x80x165	505.00

VIDEO

WWW

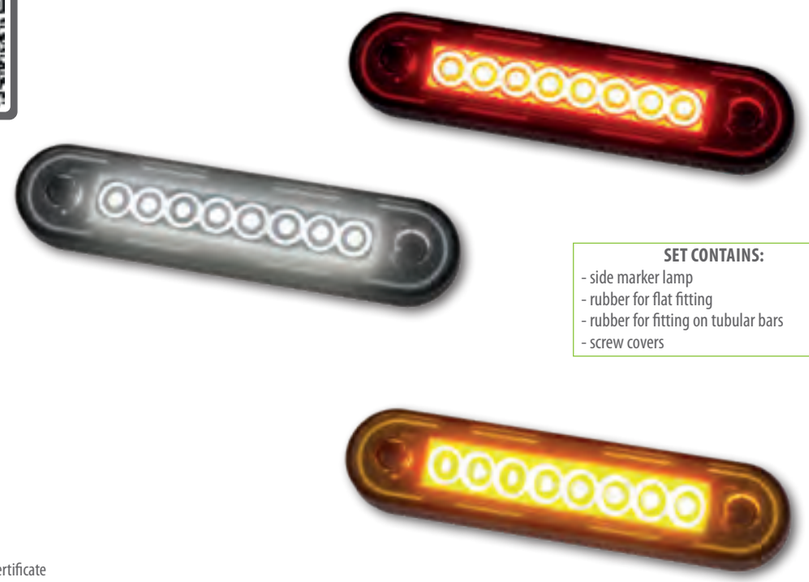

EMC E 9

SET CONTAINS:
- side marker lamp
- rubber for flat fitting
- rubber for fitting on tubular bars
- screw covers

- 1-functional **LED** clearance lamp
- European **E9** homologation
- ElectroMagnetic Compatibility – **EMC** certificate
- Shock-resistance – **PC** lampshade
- Optional polarity connection
- This popular LED Marker Light fits neatly onto tubular stainless steel, commonly used on bars for Vans and Trucks
- Lamp is equiped with screw covers
- Not only stunning light emission but also catchy brightnes

Lamp functions:
Depending on the light color:
- **front** clearance light – horizontal and vertical approval
- **rear** clearance light – horizontal and vertical approval
- **side** clearance light – horizontal approval

Technical specification:
- supply voltage: **12–36V DC**
- operating temperature: **–40°C** to **+55°C**
- lamp is resistant to any weather conditions
- lamp is fully airtight

Power consumption:
- 12V/24V =0,1A/0,1A

Power consumption / Rated power:
- 12V/24V =1,2W/2,4W

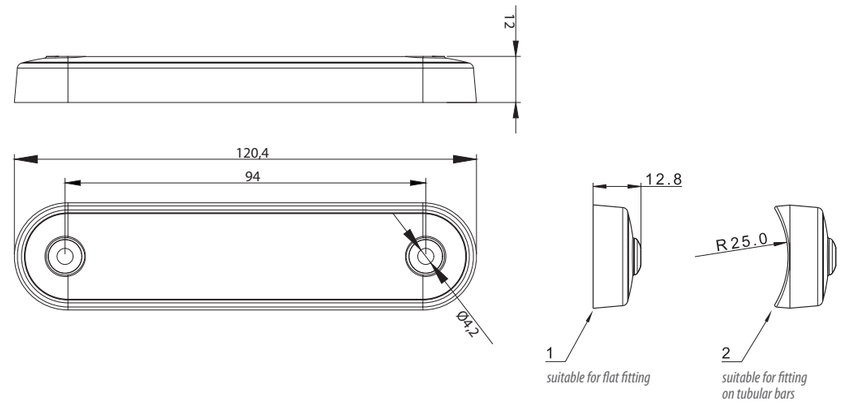

SM LED

ID/EAN	Photo		Description	Unit pack		Multipack / carton			Multipack / pallet		
				qty.	kg	qty.	cm	kg	qty.	cm	kg
FT-073 B LED LONG 5907556018228			Clearance Lamp LED 12-36V, white, loom 0,15m, with a flat and round black rubber gasket for a vehicle bullbars.	10			59x39x29			120x80x165	
FT-073 C LED LONG 5907556018235			Clearance Lamp LED 12-36V, red, loom 0,15m, with a flat and round black rubber gasket for a vehicle bullbars.	10			59x39x29			120x80x165	
FT-073 Z LED LONG 5907556018242			Clearance Lamp LED 12-36V, yellow, loom 0,15m, with a flat and round black rubber gasket for a vehicle bullbars.	10			59x39x29			120x80x165	

EMC E 9

WWW

1-functional **LED** clearance lamp with a reflector
- european **E9** homologation
- ElectroMagnetic Compatibility – **EMC** certificate
- shock-resistance – **PC** lampshade
- optional polarity connection

Lamp functions:
- clearance light

Technical specification:
- supply voltage: **12–36V DC**
- operating temperature: **–40°C** to **+55°C**
- lamp is resistant to any weather conditions
-- **IP68**

Power consumption:
- 12V/24V = 0.04A/0.04A

Power consumption / Rated power:
- 12V/24V = 0.5W/1.0W

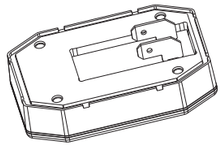

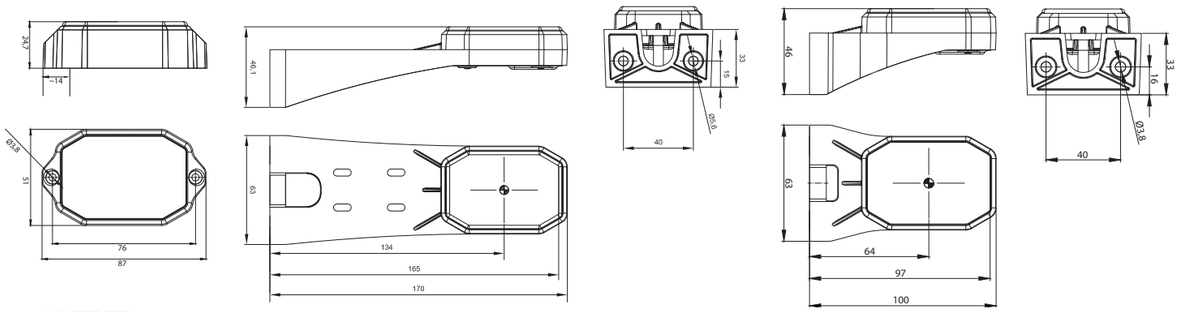

LED CAT SM

ID/EAN	Photo	Description	Unit pack		Multipack / carton			Multipack / pallet		
			qty.	kg	qty.	cm	kg	qty.	cm	kg
FT-069 B LED 5907556018143		White LED clearance lamp with a reflector, flat mounting, without cable.	10			59x39x29			120x80x165	
FT-069 BI LED 5907556018150		White LED clearance lamp with a reflector, an angle short holder, without cable.	10			59x39x29			120x80x165	
FT-069 BIV LED 5907556018167		White clearance LED lamp with a reflector, an angle long holder and without cable.	10			59x39x29			120x80x165	
FT-069 Z LED 5907556018174		Yellow LED clearance lamp with a reflector, flat mounting, without cable.	10			59x39x29			120x80x165	
FT-069 ZI LED 5907556018181		Yellow LED clearance lamp with a reflector, an angle short holder, without cable.	10			59x39x29			120x80x165	
FT-069 ZIV LED 5907556018198		Yellow clearance LED lamp with a reflector, an angle long holder and without cable.	10			59x39x29			120x80x165	
WKLAD FT-069 B LED 5907556018204		White LED clearance lamp insert with a reflector, without cable.	10			59x39x29			120x80x165	
WKLAD FT-069 Z LED 5907556018211	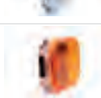	Yellow LED clearance lamp insert with a reflector, without cable.	10			59x39x29			120x80x165	

VIDEO

WWW

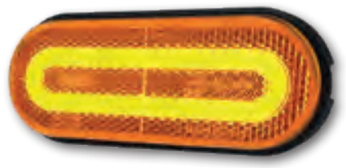

EMC E 9

1-functional **LED** clearance lamp with a reflector
European **E9** homologation
ElectroMagnetic Compatibility – **EMC** certificate
Shock-resistance – **PC** lampshade
Optional polarity connection
The lamp construction features airtightness and resistance of electronic components emitting light to adverse external weather conditions.
There are no visible elements connecting the lamp with the body (click system).

Lamp functions:
Depending on the light color:
- front clearance light with reflector
  – horizontal and vertical approval
- rear clearance light with reflector
  – horizontal and vertical approval
- side clearance light with reflector
  – horizontal approval

Technical specification:
- supply voltage: **12–36V DC**
- operating temperature: **–40°C** to **+55°C**
- lamp is resistant to any weather conditions
- lamp is fully airtight

Power consumption:
- 12V/24V = 0.1A/0.1A

Power consumption / Rated power:
- 12V/24V = 1.2W/2.4W

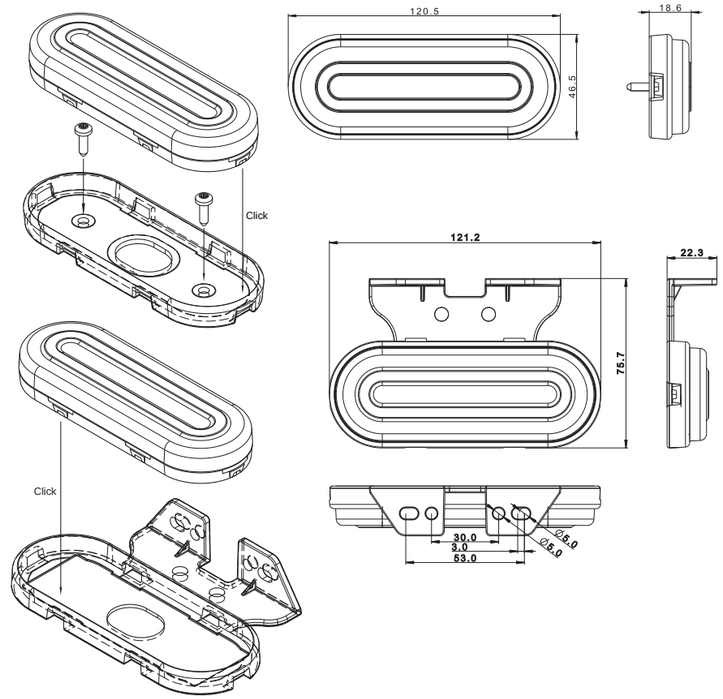

SM LED

ID/EAN	Photo		Description	Unit pack		Multipack / carton			Multipack / pallet		
				qty.	kg	qty.	cm	kg	qty.	cm	kg
FT-072 B LED 5907556015456			Clearance Lamp LED 12-36V, white with reflector and a loom 0.5 m.	10	1.10	150	59x39x29	18.80	3000	120x80x165	376.00
FT-072 C LED 5907556015463			Clearance Lamp LED 12-36V, red with reflector and a loom 0.5 m.	10	1.10	150	59x39x29	18.80	3000	120x80x165	376.00
FT-072 Z LED 5907556015470			Clearance Lamp LED 12-36V, yellow with reflector and a loom 0.5 m.	10	1.10	150	59x39x29	18.80	3000	120x80x165	376.00

EMC E9

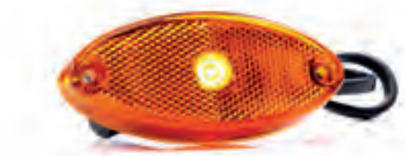

VIDEO WWW

1-functional **LED** clearance lamp with a reflector
- european **E9** homologation
- ElectroMagnetic Compatibility – **EMC** certificate
- shock-resistance – **PC** lampshade
- optional polarity connection

Lamp functions:
Depending on the light color:
- **front** clearance light
- **rear** clearance light
- **side** clearance light

Technical specification:
- supply voltage: **12–36V DC**
- operating temperature: **–40°C** to **+55°C**
- lamp is resistant to any weather conditions
- lamp is fully airtight

Power consumption:
- 12V/24V = 0.04A/0.04A

Power consumption / Rated power:
- 12V/24V = 0.5W/1W

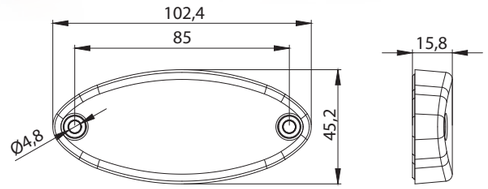

CAT SM LED

ID/EAN	Photo		Description	Unit pack qty.	Unit pack kg	Multipack / carton qty.	Multipack / carton cm	Multipack / carton kg	Multipack / pallet qty.	Multipack / pallet cm	Multipack / pallet kg
FT-061 B LED 5907556017856			Clearance Lamp LED 12-36V, white with reflector and a loom 0,5m.	10			59x39x29			120x80x165	
FT-061 B LED QS075 5907556017863			Clearance Lamp LED 12-36V, white with reflector a loom lenght 0,5m and connector QS075.	10			59x39x29			120x80x165	
FT-061 B LED QS150 5907556017870			Clearance Lamp LED 12-36V, white with reflector a loom lenght 0,5m and connector QS150.	10			59x39x29			120x80x165	
FT-061 C LED 5907556017887			Clearance Lamp LED 12-36V, red with reflector and a loom 0,5m.	10			59x39x29			120x80x165	
FT-061 C LED QS075 5907556018020			Clearance Lamp LED 12-36V, red with reflector a loom lenght 0,5m and connector QS075.	10			59x39x29			120x80x165	
FT-061 C LED QS150 5907556018037			Clearance Lamp LED 12-36V, red with reflector a loom lenght 0,5m and connector QS150.	10			59x39x29			120x80x165	
FT-061 Z LED 5907556017894			Clearance Lamp LED 12-36V, yellow with reflector and a loom 0,5m.	10			59x39x29			120x80x165	
FT-061 Z LED QS075 5907556017900			Clearance Lamp LED 12-36V, yellow with reflector a loom lenght 0,5m and connector QS075.	10			59x39x29			120x80x165	
FT-061 Z LED QS150 5907556017917			Clearance Lamp LED 12-36V, yellow with reflector a loom lenght 0,5m and connector QS150.	10			59x39x29			120x80x165	
KAT-FT-061 5907556018341			**FT-061 LED** clearance lamp angle holder.	10							

EMC E9

1-functional **LED** clearance lamp with a reflector
- european **E9** homologation
- ElectroMagnetic Compatibility – **EMC** certificate
- shock-resistance – **PC** lampshade
- optional polarity connection

Lamp functions:
Depending on the light color:
- **front** clearance light
- **rear** clearance light
- **side** clearance light

Technical specification:
- supply voltage: **12–36V DC**
- operating temperature: **–40°C** to **+55°C**
- lamp is resistant to any weather conditions
- lamp is fully airtight

Power consumption:
- 12V/24V = 0.04A/0.04A

Power consumption / Rated power:
- 12V/24V = 0.5W/1W

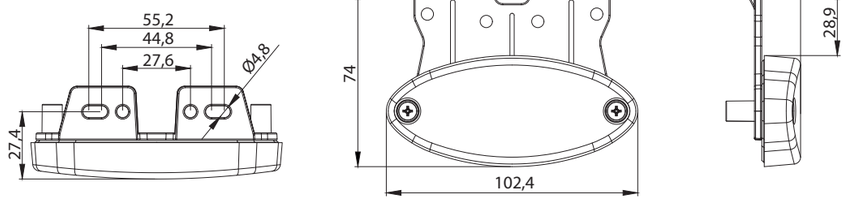

CAT SM LED

ID/EAN	Photo		Description	Unit pack qty.	Unit pack kg	Multipack / carton qty.	Multipack / carton cm	Multipack / carton kg	Multipack / pallet qty.	Multipack / pallet cm	Multipack / pallet kg
FT-061 B+K LED 5907556018259			Clearance Lamp LED 12-36V, white with reflector and an angle holder, cable 0,5m.	10			59x39x29			120x80x165	
FT-061 B+K LED QS075 5907556018266			Clearance Lamp LED 12-36V, white with reflector and an angle holder, cable 0,5m and connector QS075.	10			59x39x29			120x80x165	
FT-061 B+K LED QS150 5907556018273			Clearance Lamp LED 12-36V, white with reflector and an angle holder, cable 0,5m and connector QS150.	10			59x39x29			120x80x165	
FT-061 C+K LED 5907556018280			Clearance Lamp LED 12-36V, red with reflector and an angle holder, cable 0,5m.	10			59x39x29			120x80x165	
FT-061 C+K LED QS075 5907556018297			Clearance Lamp LED 12-36V, red with reflector and an angle holder, cable 0,5m and connector QS075.	10			59x39x29			120x80x165	
FT-061 C+K LED QS150 5907556018303			Clearance Lamp LED 12-36V, red with reflector and an angle holder, cable 0,5m and connector QS150.	10			59x39x29			120x80x165	
FT-061 Z+K LED 5907556018310			Clearance Lamp LED 12-36V, yellow with reflector and an angle holder, cable 0,5m.	10			59x39x29			120x80x165	
FT-061 Z+K LED QS075 5907556018327			Clearance Lamp LED 12-36V, yellow with reflector and an angle holder, cable 0,5m and connector QS075.	10			59x39x29			120x80x165	
FT-061 Z+K LED QS150 5907556018334			Clearance Lamp LED 12-36V, yellow with reflector and an angle holder, cable 0,5m and connector QS150.	10			59x39x29			120x80x165	

FT-141 LED

FT-141 A LED

EMC E 9

2-functional universal **LED** end-outline marker
with the rubber bracket
European **E9** homologation
ElectroMagnetic Compatibility – **EMC** certificate
Shock-resistance – **PC** lampshade
Optional polarity connection

Lamp functions:
- **white** clearance light
- **red** clearance light

Technical specification:
- supply voltage: **12–36V DC**
- operating temperature: **–40°C** to **+55°C**
- lamp is resistant to any weather conditions
- lamp is fully airtight

Power consumption:
- 12V/24V = 0.05A/0.05A

Power consumption / Rated power:
- 12V/24V = 0.6W/1.2W

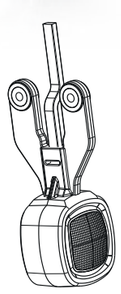

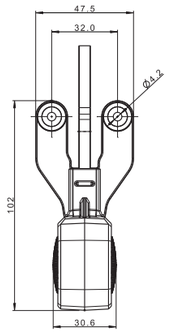

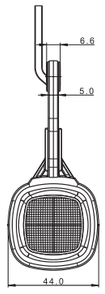

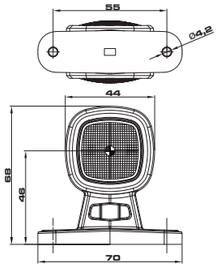

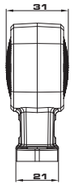

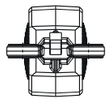

SM LED

ID/EAN	Photo		Description	Unit pack		Multipack / carton			Multipack / pallet		
				qty.	kg	qty.	cm	kg	qty.	cm	kg
FT-141 LED 5907556015517			2-functional LED side marker, 12-30V, hanging version, 2×0.75 mm2 cable 0.5 m long.	1	0.075	200	59x39x29	15.60	4000	120x80x165	337.00
FT-141 A LED 5907556015593			2-functional LED side marker, 12x30V, 2x0.75 mm2 cable 0.5 m.	1			59x39x29			120x80x165	

EMC E 9

3-functional **LED** end-outline marker with the rubber elastic bracket.
- european **E9** homologation
- ElectroMagnetic Compatibility – **EMC** certificate
- shock-resistance – PC lampshade

Lamp functions:
- white clearance front light
- red clearance rear light
- yellow clearance side light
- lamp is fully airtight

Technical specification:
- supply voltage: **12–36V DC**
- operating temperature: **– 40°C** to **+55°C**
- optional polarity connection

Power consumption:
- 12V/24V = 0.1A/0.1A

Power consumption / Rated power:
- 12V/24V = 1.2W/2.4W

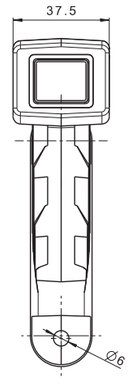

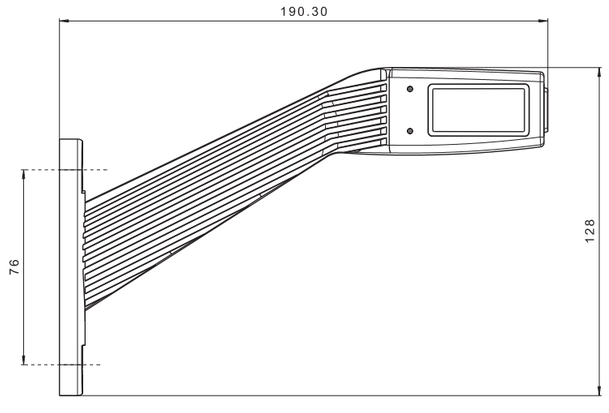

SM LED

ID/EAN	Photo		Description	Unit pack		Multipack / carton			Multipack / pallet		
				qty.	kg	qty.	cm	kg	qty.	cm	kg
FT-145 L LED 5907556013599			3-functional LED side marker, left, long, slanted rubber arm, 2x0.75 mm² cable 0.3 m long.	1	0.190	100	59x39x29	19.00	2000	120x80x165	405.00
FT-145 P LED 5907556013605			3-functional LED side marker, right, long, slanted rubber arm, 2x0.75 mm² cable 0.3 m long.	1	0.190	100	59x39x29	19.00	2000	120x80x165	405.00

LED clearance 1-functional

VIDEO WWW

EMC E 9

1-functional **LED** lamp
- ElectroMagnetic Compatibility – **EMC** certificate
- shock-resistance – **PC lampshade**
- optional polarity connection
- lamp is equipped with 2x075 mm² wire; 0.5 m lenght.
- the vertical and horizontal assembly is possible by means of double-sided tape or/and two screws.

Lamp functions:
- **position front light (FT-195 B LED)**
- **postion rear light (FT-195 C LED)**
- **positon side light (FT-195 Z LED)**
- application: trailers; semi-trailers; special vehicles and others

Lamp parameters:
Universal supply voltage: **12–36V DC**
Operating temperature: **–40°C** to **+55°C**
Lamp is resistant to any weather conditions
Lamp is fully airthight

Power consumption:
- **12V/24V = 0.08A/0.08A (FT-195 B LED)**
- **12V/24V = 0.025A/0.025A (FT-195 C LED)**
- **12V/24V = 0.05A/0.05A (FT-195 Z LED)**

Power consumption (rated power):
- **12V/24V = 1W/2W (FT-195 B LED)**
- **12V/24V = 0.3W/0.6W (FT-195 C LED)**
- **12V/24V = 0.6W/1.2W (FT-195 Z LED)**

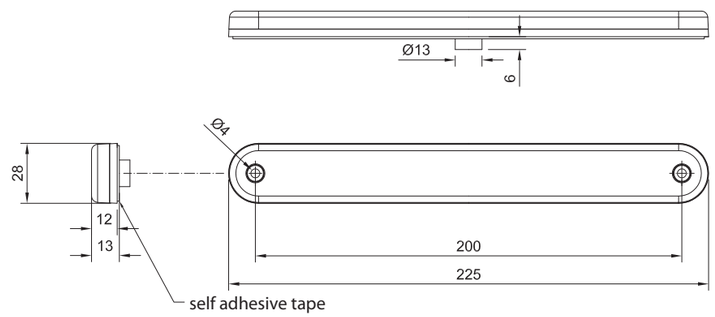

SM LED

ID/EAN	Photo		Description	Unit pack		Multipack / carton			Multipack / pallet		
				qty.	kg	qty.	cm	kg	qty.	cm	kg
FT-195 B LED 5907556011267			LED clearance lamp 12-36V, white with self-adhesive tape and 0.5 m wire.	10	0.80	200	59x39x29	16.00	4000	120x80x165	345.00
FT-195 C LED 5907556011274			LED clearance lamp 12-36V, red with self-adhesive tape and 0.5 m wire.	10	0.80	200	59x39x29	16.00	4000	120x80x165	345.00
FT-195 Z LED 5907556011281			LED clearance lamp 12-36V, yellow with self-adhesive tape and 0.5 m wire.	10	0.80	200	59x39x29	16.00	4000	120x80x165	345.00

LED clearance 2-functional

VIDEO WWW

EMC E 9

2-functional **LED** clearance lamp with a reflector
European **E9** homologation
Shock-resistance – **PC** lampshade
Three power cords:
Ground – white, clearance lamp function – black, indicator lamp function – yellow
When the indicator light function works, the side clearance light function is switched off.

NEW TECHNOLOGICAL SOLUTIONS
IMPROVED AIRTIGHTNES OF ELECTRONIC MODULE
INNOVATIVE ASSEMBLY „CLICK-ON"
HIGH LEVEL OF LIGHT EMISSION
TIMELESS DESIGN
ASSEMBLY SCREWS ARE NOT VISIBLE

Lamp functions:
- side clearance light
- indicator light **CAT. 5**
- side reflector function

Technical specification:
- supply voltage: **12–36V DC**
- operating temperature: **–40°C** to **+55°C**
- lamp is resistant to any weather conditions
- lamp is fully airtight

Power consumption:
- Clearance light **12V/24V=0.08A/0.08A**
- Indicator light **12V/24V = 0.08A/0.08A**

Power consumption / Rated power:
- **12V/24V = 1.0W/2.0W**

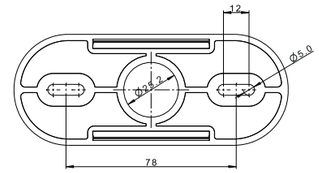

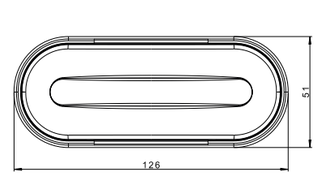

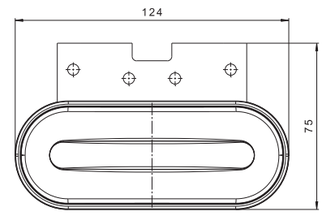

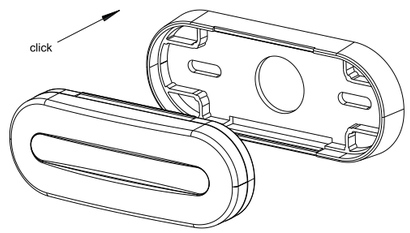

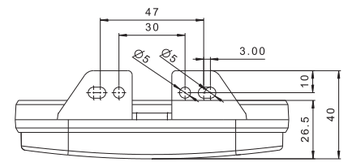

SM LED

ID/EAN	Photo		Description	Unit pack		Multipack / carton			Multipack / pallet		
				qty.	kg	qty.	cm	kg	qty.	cm	kg
FT-071 + K LED 5907556011878			Clearance lamp with cat. 5 indicator function, 12-36V, yellow with reflector, an angle honder and 0.5m cable.	10	1.08	200	59x39x29	21.6	4000	120x80x165	457.00
FT-071 LED 5907556011830			Clearance lamp with cat. 5 indicator function, 12-36V, yellow with reflector and wiring loom.	10	1.02	200	59x39x29	20.4	4000	120x80x165	433.00

VIDEO

WWW

EMC

E 9

1-functional **LED** clearance lamp with a reflector
- european **E9** homologation
- ElectroMagnetic Compatibility – **EMC** certificate
- shock-resistance – **PC** lampshade
- optional polarity connection

The lamp meets ADR requirements.

The unique lamp construction solution which increases air-tightness
and the light and electronic components resistance to any external conditions.
The revolutionary system of assembly – there are no visible signs
of joining bodywork with lamp surface.
The lamp is available in two versions and presents a revolutionary light emission system
which goes along with an innovative design. This combination procures that with
the highest probability our lamp is the most recognizable and eye-catching product on the market.

Lamp functions:
rear clearance light with reflector
front clearance light with reflector
side clearance light with reflector

Technical specification:
- supply voltage: **12–36V DC**
- operating temperature: **–40°C** to **+55°C**
- lamp is resistant to any weather conditions
- lamp is fully airtight

Power consumption:
12V/24V=0.08A/0.08A

Power consumption / Rated power:
12V/24V = 1.0W/2.0W

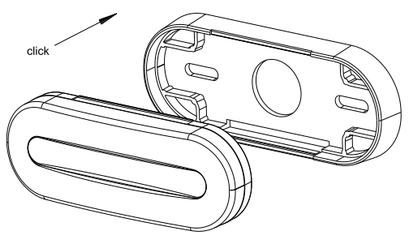

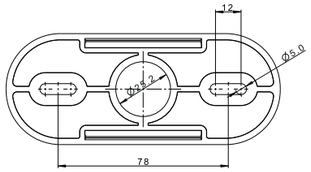

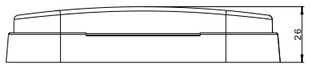

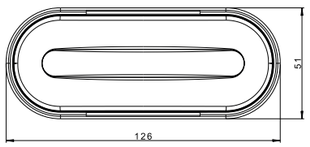

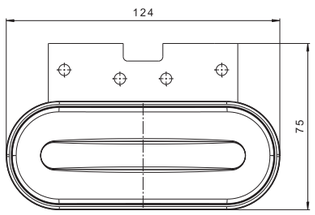

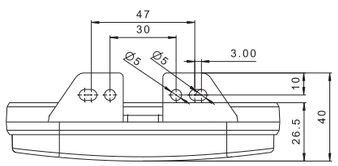

SM LED

ID/EAN	Photo		Description	Unit pack		Multipack / carton			Multipack / pallet		
				qty.	kg	qty.	cm	kg	qty.	cm	kg
FT-070 B LED 5907556011328			LED clearance lamp 12-36V, white with reflector and 0.5 m wire. The lamp meets ADR requirements.	10	1.00	200	59x39x29	20.00	4000	120x80x165	425.00
FT-070 B LED QS075 5907556011335			LED clearance lamp 12-36V, white with reflector and 0.5 m wire and QS075 connector. The lamp meets ADR requirements.	10	1.06	200	59x39x29	21.20	4000	120x80x165	449.00
FT-070 B LED QS150 5907556011342			LED clearance lamp 12-36V, white with reflector and 0.5 m wire and QS150 connector. The lamp meets ADR requirements.	10	1.10	200	59x39x29	22.00	4000	120x80x165	465.00
FT-070 B+K LED 5907556011359			LED clearance lamp 12-36V, white with reflector, holder and 0.5 m wire. The lamp meets ADR requirements.	10	1.06	200	59x39x29	21.20	4000	120x80x165	449.00
FT-070 B+K LED QS075 5907556011366			LED clearance lamp 12-36V, white with reflector, holder and 0.5 m wire with QS075 connector. The lamp meets ADR requirements.	10	1.14	200	59x39x29	22.80	4000	120x80x165	481.00
FT-070 B+K LED QS150 5907556011373			LED clearance lamp 12-36V, white with reflector, holder and 0.5 m wire with QS150 connector. The lamp meets ADR requirements.	10	1.16	200	59x39x29	23.20	4000	120x80x165	489.00
FT-070 C LED 5907556011380			LED clearance lamp 12-36V, red with reflector and 0.5 m wire. The lamp meets ADR requirements.	10	1.00	200	59x39x29	20.00	4000	120x80x165	425.00
FT-070 C LED QS075 5907556011397			LED clearance lamp 12-36V, red with reflector and 0.5 m wire and QS075 connector. The lamp meets ADR requirements.	10	1.06	200	59x39x29	21.20	4000	120x80x165	449.00
FT-070 C LED QS150 5907556011403			LED clearance lamp 12-36V, red with reflector and 0.5 m wire and QS150 connector. The lamp meets ADR requirements.	10	1.10	200	59x39x29	22.00	4000	120x80x165	465.00
FT-070 C+K LED 5907556011410			LED clearance lamp 12-36V, red with reflector, holder and 0.5 m wire. The lamp meets ADR requirements.	10	1.06	200	59x39x29	21.20	4000	120x80x165	449.00
FT-070 C+K LED QS075 5907556011427			LED clearance lamp 12-36V, red with reflector, holder and 0.5 m wire with QS075 connector. The lamp meets ADR requirements.	10	1.14	200	59x39x29	22.80	4000	120x80x165	481.00
FT-070 C+K LED QS150 5907556011434			LED clearance lamp 12-36V, red with reflector, holder and 0.5 m wire with QS150 connector. The lamp meets ADR requirements.	10	1.16	200	59x39x29	23.20	4000	120x80x165	489.00
FT-070 Z LED 5907556011441			LED clearance lamp 12-36V, yellow with reflector and 0.5 m wire. The lamp meets ADR requirements.	10	1.00	200	59x39x29	20.00	4000	120x80x165	425.00
FT-070 Z LED QS075 5907556011458			LED clearance lamp 12-36V, yellow with reflector and 0.5 m wire and QS075 connector. The lamp meets ADR requirements.	10	1.06	200	59x39x29	21.20	4000	120x80x165	449.00
FT-070 Z LED QS150 5907556011465			LED clearance lamp 12-36V, yellow with reflector and 0.5 m wire and QS150 connector. The lamp meets ADR requirements.	10	1.10	200	59x39x29	22.00	4000	120x80x165	465.00
FT-070 Z+K LED 5907556011472			LED clearance lamp 12-36V, yellow with reflector, holder and 0.5 m wire. The lamp meets ADR requirements.	10	1.06	200	59x39x29	21.20	4000	120x80x165	449.00
FT-070 Z+K LED QS075 5907556011489			LED clearance lamp 12-36V, yellow with reflector, holder and 0.5 m wire with QS075 connector. The lamp meets ADR requirements.	10	1.14	200	59x39x29	22.80	4000	120x80x165	481.00
FT-070 Z+K LED QS150 5907556011496			LED clearance lamp 12-36V, yellow with reflector, holder and 0.5 m wire with QS150 connector. The lamp meets ADR requirements.	10	1.16	200	59x39x29	23.20	4000	120x80x165	489.00

VIDEO

WWW

EMC E 9

1-functional **LED** clearance lamp with a reflector.
European **E9** homologation
ElectroMagnetic Compatibility – **EMC** certificate
Optional polarity connection

ASSEMBLY SCREWS ARE NOT VISIBLE
TIMELESS DESIGN
INNOVATIVE ASSEMBLY „CLICK-ON"
HIGH LEVEL OF LIGHT EMISSION
2-FUNCTIONAL ANGLE HOLDER

Lamp functions:
- rear clearance light with reflector
- front clearance light with reflector
- side clearance light with reflector

Technical specification:
- supply voltage: **12–36V DC**
- operating temperature: **–40°C** to **+55°C**
- lamp is resistant to any weather conditions
- lamp is fully airtight

Power consumption:
12V/24V=0.08A/0.08A

Power consumption / Rated power:
12V/24V = 1.0W/2.0W

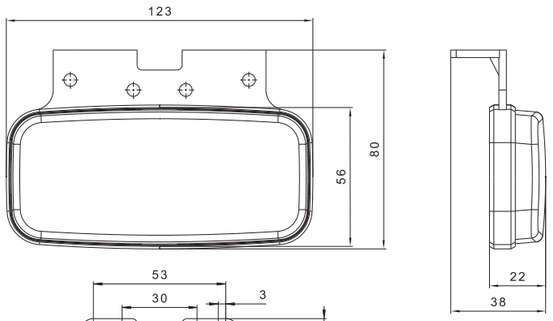

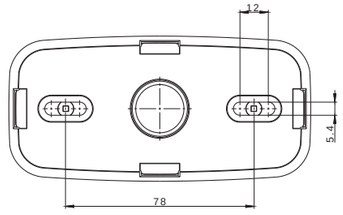

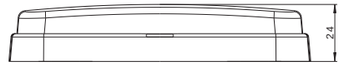

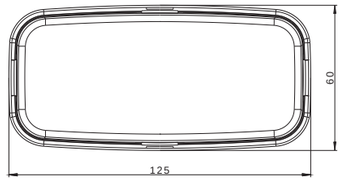

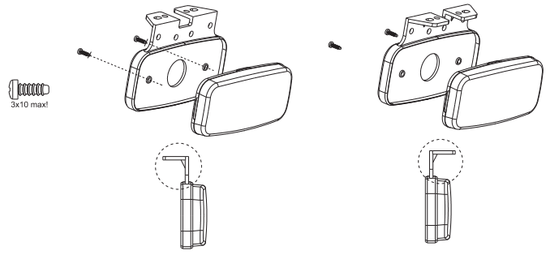

ID/EAN	Photo		Description	Unit pack		Multipack / carton			Multipack / pallet		
				qty.	kg	qty.	cm	kg	qty.	cm	kg
FT-075 B LED 5907556011984			Clearance lamp 12-36V, white with reflector and wiring loom.	10	1.06	200	59x39x29	21.20	4000	120x80x165	449.00
FT-075 B LED QS075 5907556011991			Clearance lamp 12-36V, white with reflector, wiring loom dł. 0.5 m and connector QS075.	10	1.12	200	59x39x29	22.40	4000	120x80x165	473.00
FT-075 B LED QS150 5907556012004			Clearance lamp 12-36V, white with reflector, wiring loom dł. 0.5 m and connector QS150.	10	1.16	200	59x39x29	23.20	4000	120x80x165	489.00
FT-075 B+K LED 5907556012011			Clearance lamp 12-36V, white with reflector angle holder and wiring loom.	10	1.08	200	59x39x29	21.60	4000	120x80x165	457.00
FT-075 B+K LED QS075 5907556012028			Clearance lamp 12-36V, white with reflector, angle holder, wiring loom and connector QS075.	10	1.14	200	59x39x29	22.80	4000	120x80x165	481.00
FT-075 B+K LED QS150 5907556012035			Clearance lamp 12-36V, white with reflector, angle holder, wiring loom and connector QS150.	10	1.18	200	59x39x29	23.60	4000	120x80x165	497.00
FT-075 C LED 5907556012042			Clearance lamp 12-36V, red with reflector and wiring loom.	10	1.06	200	59x39x29	21.20	4000	120x80x165	449.00
FT-075 C LED QS075 5907556012059			Clearance lamp 12-36V, red with reflector, wiring loom dł. 0.5 m and connector QS075.	10	1.12	200	59x39x29	22.40	4000	120x80x165	473.00
FT-075 C LED QS150 5907556012066			Clearance lamp 12-36V, red with reflector, wiring loom dł. 0.5 m and connector QS150.	10	1.16	200	59x39x29	23.20	4000	120x80x165	489.00
FT-075 C+K LED 5907556012073			Clearance lamp 12-36V, red with reflector, angle holder and wiring loom.	10	1.08	200	59x39x29	21.60	4000	120x80x165	457.00
FT-075 C+K LED QS075 5907556012080			Clearance lamp 12-36V, red with reflector, angle holder, wiring loom and connector QS075.	10	1.14	200	59x39x29	22.80	4000	120x80x165	481.00
FT-075 C+K LED QS150 5907556012097			Clearance lamp 12-36V, red with reflector, angle holder, wiring loom and connector QS150.	10	1.18	200	59x39x29	23.60	4000	120x80x165	497.00
FT-075 Z LED 5907556012103			Clearance lamp 12-36V, yellow with reflector and wiring loom.	10	1.06	200	59x39x29	21.20	4000	120x80x165	449.00
FT-075 Z LED QS075 5907556012110			Clearance lamp 12-36V, yellow with reflector, wiring loom dł. 0.5 m and connector QS075.	10	1.12	200	59x39x29	22.40	4000	120x80x165	473.00
FT-075 Z LED QS150 5907556012127			Clearance lamp 12-36V, yellow with reflector, wiring loom dł. 0.5 m and connector QS150.	10	1.16	200	59x39x29	23.20	4000	120x80x165	489.00
FT-075 Z+K LED 5907556012134			Clearance lamp 12-36V, yellow with reflector, angle holder and wiring loom.	10	1.08	200	59x39x29	21.60	4000	120x80x165	457.00
FT-075 Z+K LED QS075 5907556012141			Clearance lamp 12-36V, yellow with reflector, angle holder, wiring loom and connector QS075.	10	1.14	200	59x39x29	22.80	4000	120x80x165	481.00
FT-075 Z+K LED QS150 5907556012158			Clearance lamp 12-36V, yellow with reflector, angle holder, wiring loom and connector QS150.	10	1.18	200	59x39x29	23.60	4000	120x80x165	497.00

LED clearance 2-functional

VIDEO

WWW

EMC E 9

2-functional **LED** clearance lamp with a reflector
- european **E9** homologation
- shock-resistance – **PC** lampshade

Three power cords:
Ground – white, clearance lamp function – black, indicator lamp function – yellow
When the indicator light function works, the side clearance light function is switched on.

ASSEMBLY SCREWS ARE NOT VISIBLE
INNOVATIVE ASSEMBLY „CLICK-ON"
HIGH LEVEL OF LIGHT EMISSION
TIMELESS DESIGN
UNIVERSAL ANGLE HOLDER

Lamp functions:
- side clearance light
- indicator light **cat. 5**
- side reflector

Technical specification:
- supply voltage: **12–36V DC**
- operating temperature: **–40°C** to **+55°C**
- lamp is resistant to any weather conditions
- lamp is fully airtight

Power consumption:
- clearance light: **12V/24V = 0.08A/0.08A**
- indicator: **12V/24V = 0.08A/0.08A**

Functions may work equally.

Power consumption / Rated power:
- clearance light: **12V/24V = 1.0W/2.0W**
- indicator: **12V/24V = 1.0W/2.0W**

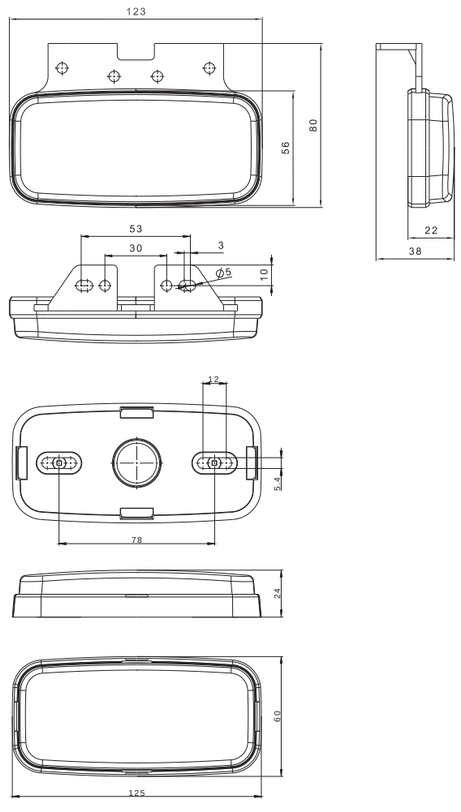

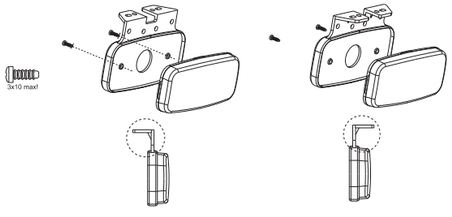

SM LEC

ID/EAN	Photo		Description	Unit pack		Multipack / carton			Multipack / pallet		
				qty.	kg	qty.	cm	kg	qty.	cm	kg
FT-080 + K LED 5907556012165			FT-080+K LED Clearance lamp with cat. 5 indicator function, 12-36V, yellow with reflector, angle holder and wiring loom.	10	1.08	200	59x39x29	21.60	4000	120x80x165	457.00
FT-080 LED 5907556012172			FT-080 LED Clearance lamp with cat. 5 indicator function, 12-36V, yellow with reflector and wiring loom.	10	1.06	200	59x39x29	21.20	4000	120x80x165	449.00

WWW

EMC E 9

1-functional **LED** clearance lamp with reflector.
European **E9** homologation; **Reg 10**
ElectroMagnetic Compatibility – **EMC** certificate
Reinforced construction
Optional polarity connection

Lamp functions:
- *Depending from the light color:*
- front clearance light – **white color**
- side clearance light – **yellow color**

Lamp assembly (E9 homologation):
- white front position light – *vertical and horizontal*
- yellow side position light – *horizontal*

Technical specification:
- supply voltage: **12–36V DC**
- operating temperature: **–40°C** to **+55 C**
- lamp is resistant to any weather conditions
- lamp is fully airtight

Power consumption:
- 12V/24V = 0.02A/0.02A
Power consumption / Rated power:
- 12V/24V = 0.25W/0.5W

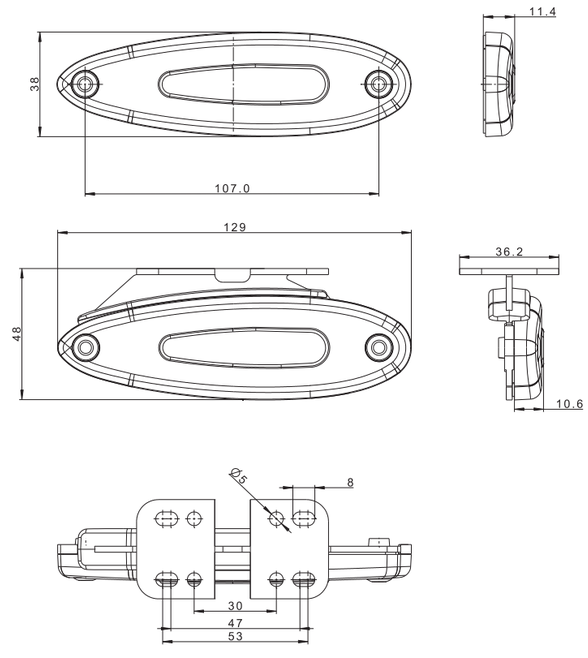

SM LEC

ID/EAN	Photo		Description	Unit pack		Multipack / carton			Multipack / pallet		
				qty.	kg	qty.	cm	kg	qty.	cm	kg
FT-076 B LED 5907556013896			Clearance Lamp LED 12-36V, white with reflector and a loom.	10	0.050	250	59x39x29	12.50	5000	120x80x165	275.00
FT-076 Z LED 5907556013902			Clearance Lamp LED 12-36V, white with reflector, with self-adhesive tape and a loom.	10	0.050	250	59x39x29	12.50	5000	120x80x165	275.00
FT-076 Z+K LED 5907556013773			Clearance Lamp LED 12-36V, yellow with reflector, angle holder and a loom.	10	0.068	200	59x39x29	13.60	4000	120x80x165	297.00

WWW

EMC E 9

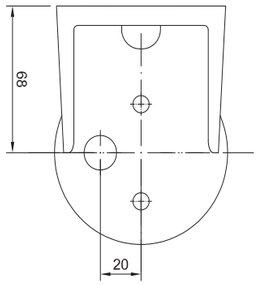

1-functional **LED** clearance lamp with a reflector.
European **E9** homologation
ElectroMagnetic Compatibility – **EMC** certificate
Shock-resistance – **PC** lampshade
Optional polarity connection

Lamp functions:
- rear clearance light with reflector
- front clearance light with reflector
- side clearance light with reflector

Technical specification:
- supply voltage: **12–36V DC**
- operating temperature: **–40°C** to **+55°C**
- lamp is resistant to any weather conditions
- lamp is fully airtight

Power consumption:
- white or yellow light **12V/24V = 0.04A/0.04A**
- red light **12V/24V = 0.03A/0.03A**

Rated power:
- white or yellow light **12V/24V = 0.5W/1W**
- red light **12V/24V = 0.4W/0.8W**

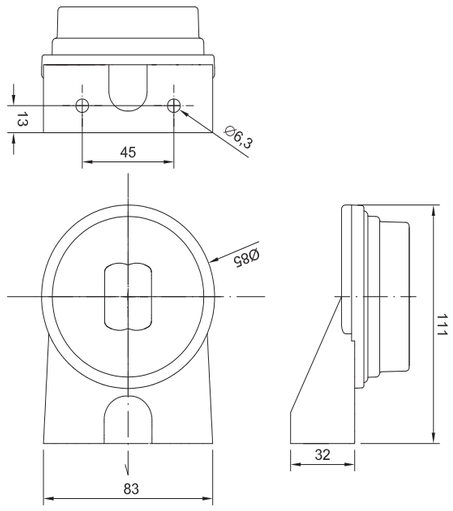

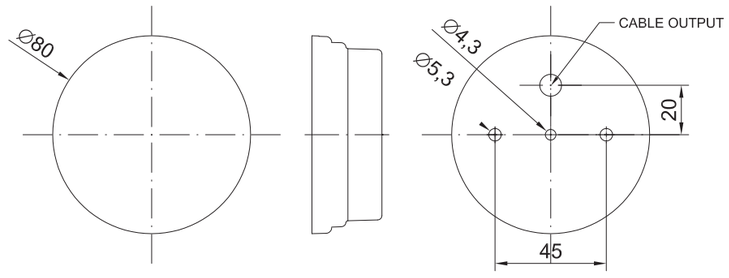

SM LED

ID/EAN	Photo		Description	Unit pack		Multipack / carton			Multipack / pallet		
				qty.	kg	qty.	cm	kg	qty.	cm	kg
FT-060 B LED 5907556009875			White LED clearance lamp 12-30 V with reflector and wire harness.	2	0.170	250	59x39x29	21.25	5000	120x80x165	450.00
FT-060 C LED 5907556009905			Red LED clearance lamp 12-30 V with reflector and wire harness.	2	0.170	250	59x39x29	21.25	5000	120x80x165	450.00
FT-060 L B+K LED 5907556009851			White LED clearance lamp 12-30V, left with reflector, mounting holder and wire harness	1	0.150	120	59x39x29	18.00	2400	120x80x165	385.00
FT-060 L C+K LED 5907556009882			Red LED clearance lamp 12-30 V, left with reflector, mounting holder and wire harness.	1	0.150	120	59x39x29	18.00	2400	120x80x165	385.00
FT-060 P B+K LED 5907556009868			White LED clearance lamp 12-30 V, right with reflector, mounting holder and wire harness.	1	0.150	120	59x39x29	18.00	2400	120x80x165	385.00
FT-060 P C+K LED 5907556009899			Red LED clearance lamp 12-30 V, right with reflector, mounting holder and wire harness.	1	0.150	120	59x39x29	18.00	2400	120x80x165	385.00
FT-060 Z LED 5907556009929			Yellow LED clearance lamp 12-30V with reflector and wire harness.	2	0.170	250	59x39x29	21.25	5000	120x80x165	450.00
FT-060 Z+K LED 5907556009912			Yellow LED clearance lamp 12-30V with reflector, mounting holder and wire harness.	1	0.150	120	59x39x29	18.00	2400	120x80x165	385.00
KAT FT-060 5907556009974			Angle holder for FT-060 LED clearance lamps.	2	0.126						

EMC E9

WWW

FT-140 F LED

3-functional universal **LED** clearance lamp with the rubber bracket and removable opitacal module
- european **E9** homologation
- ElectroMagnetic Compatibility – **EMC** certificate
- shock-resistance – **PC** lampshade
- optional polarity connection

Lamp functions:
- white clearance light
- red clearance light
- yellow clearance light

Technical specification:
- supply voltage: **12–36V DC**
- operating temperature: **–40°C** to **+55°C**
- lamp is resistant to any weather conditions
- lamp is fully airtight

Power consumption:
- **12V/24V = 0.1A/0.1A**

Power consumption / Rated power:
- **12V/24V = 1.2W/2.4W**

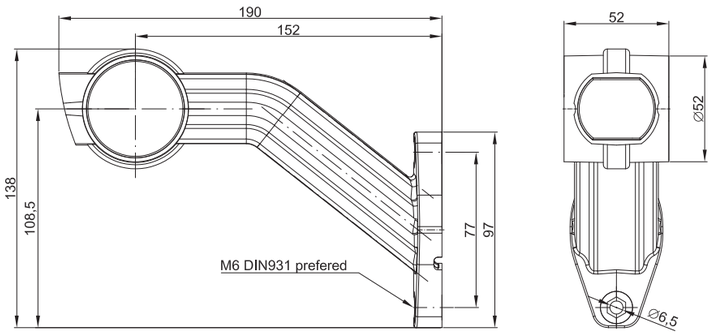

FT-140 A LED

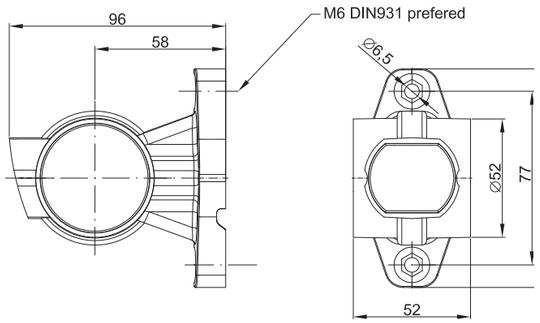

FT-140 W LED

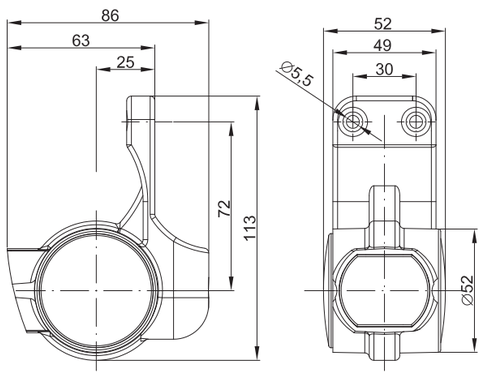

SM LED

ID/EAN	Photo		Description	Unit pack		Multipack / carton			Multipack / pallet		
				qty.	kg	qty.	cm	kg	qty.	cm	kg
FT-140 A L LED 5907556008403			3-functional LED side marker, left, short straight rubber bracket, 2x0.75 mm² cable 0.5 m long.	1	0.14	140	59x39x29	19.60	2800	120x80x165	417.00
FT-140 A L LED ***QS075** 5907556008632			3-functional LED side marker, left, short straight rubber bracket, 2x0.75 mm² cable 0.5 m long with QS075 connector.	1	0.19	140	59x39x29	26.60	2800	120x80x165	557.00
FT-140 A L LED ***QS150** 5907556008595			3-functional LED side marker, left, short straight rubber bracket, 2x0.75 mm² cable 0.5 m long with QS150 connector.	1	0.19	140	59x39x29	26.60	2800	120x80x165	557.00
FT-140 A P LED 5907556008410			3-functional LED side marker, right, short straight rubber bracket, 2x0.75 mm² cable 0.5 m long.	1	0.14	140	59x39x29	19.60	2800	120x80x165	417.00
FT-140 A P LED ***QS075** 5907556008625			3-functional LED side marker, right, short straight rubber bracket, 2x0.75 mm² cable 0.5 m long with QS075 connector.	1	0.19	140	59x39x29	26.60	2800	120x80x165	557.00
FT-140 A P LED ***QS150** 5907556008588			3-functional LED side marker, right, short straight rubber bracket, 2x0.75 mm² cable 0.5 m long with QS150 connector.	1	0.19	140	59x39x29	26.60	2800	120x80x165	557.00
FT-140 F L LED 5907556008427			3-functional LED side marker, left, long, slanted rubber arm, 2x0.75 mm² cable 0.5 m long.	1	0.22	80	59x39x29	17.60	1600	120x80x165	377.00
FT-140 F L LED ***QS075** 5907556008649			3-functional LED side marker, left, long, slanted rubber arm, 2x0.75 mm² cable 0.5 m long with QS075 connector.	1	0.27	80	59x39x29	21.60	1600	120x80x165	457.00
FT-140 F L LED ***QS150** 5907556008601			3-functional LED side marker, left, long, slanted rubber arm, 2x0.75 mm² cable 0.5 m long with QS150 connector.	1	0.27	80	59x39x29	21.60	1600	120x80x165	457.00
FT-140 F P LED 5907556008434			3-functional LED side marker, right, long, slanted rubber arm, 2x0.75 mm² cable 0.5 m long.	1	0.22	80	59x39x29	17.60	1600	120x80x165	377.00
FT-140 F P LED ***QS075** 5907556008656			3-functional LED side marker, right, long, slanted rubber arm, 2x0.75 mm² cable 0.5 m long with QS075 connector.	1	0.27	80	59x39x29	21.60	1600	120x80x165	457.00
FT-140 F P LED ***QS150** 5907556008618			3-functional LED side marker, right, long, slanted rubber arm, 2x0.75 mm² cable 0.5 m long with QS150 connector.	1	0.27	80	59x39x29	21.60	1600	120x80x165	457.00
FT-140 W L LED 5907556008724			3-functional LED side marker, left, short rubber arm (hanging version), 2x0.75 mm² cable 0.5 m long.	1	0.16	160	59x39x29	25.60	3200	20x80x165	537.00
FT-140 W L LED ***QS075** 5907556009066			3-functional LED side marker, left, short rubber arm (hanging version), 2x0.75 mm² cable 0.5 m long with QS075 connector.	1	0.21	160	59x39x29	33.60	3200	20x80x165	697.00
FT-140 W L LED ***QS150** 5907556009042			3-functional LED side marker, left, short rubber arm (hanging version), 2x0.75 mm² cable 0.5 m long with QS150 connector.	1	0.21	160	59x39x29	33.60	3200	20x80x165	697.00
FT-140 W P LED 5907556008731			3-functional LED side marker, right, short rubber arm (hanging version), 2x0.75 mm² cable 0.5 m long.	1	0.16	160	59x39x29	25.60	3200	20x80x165	537.00
FT-140 W P LED ***QS075** 5907556009059			3-functional LED side marker, right, short rubber arm (hanging version), 2x0.75 mm² cable 0.5 m long with QS075 connector.	1	0.21	160	59x39x29	33.60	3200	20x80x165	697.00
FT-140 W P LED ***QS150** 5907556009035			3-functional LED side marker, right, short rubber arm (hanging version), 2x0.75 mm² cable 0.5 m long with QS150 connector.	1	0.21	160	59x39x29	33.60	3200	20x80x165	697.00

Omega holder is not included in the basic accessories of the lamp.

LED clearance 2-functional

FT-038 CB LED

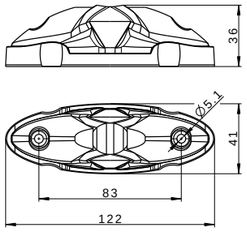

FT-038 CB I LED

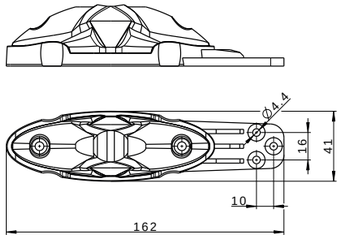

FT-038 CB II LED

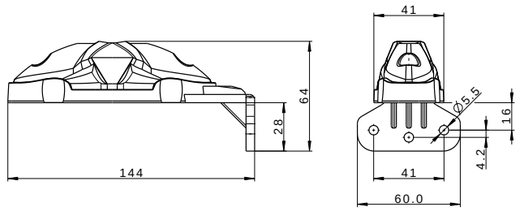

EMC E 9

WWW

2-funtional **LED** clearance lamp
- european **E9** homologation
- ElectroMagnetic Compatibility – **EMC** certificate
- shock-resistance – **PC** lampshade
- optional polarity connection

Lamp functions:
- white clearance light
- red clearance light

Technical specification:
- supply voltage: **12–36V DC**
- operating temperature: **–40°C** to **+55°C**
- lamp is resistant to any weather conditions
- lamp is fully airtight

Power consumption / Rated power:
- 12V=0.04A/0.5W
- 24V=0.04A/1W

SM LED

ID/EAN	Photo		Description	Unit pack		Multipack / carton			Multipack / pallet		
				qty.	kg	qty.	cm	kg	qty.	cm	kg
FT-038 CB LED 5907556006522			LED clearance lamp, bifunctional, with a sidelight (front and tail).	2	0.15	250	59x39x29	18.75	5000	120x80x165	400.00
FT-038 CB I 5907556006553			LED clearance lamp, bifunctional, with a sidelight (front and tail), on an extended straight bracket.	2	0.15	200	59x39x29	15.00	4000	120x80x165	325.00
FT-038 CB II LED 5907556006584			LED clearance lamp, bifunctional, with a sidelight (front and tail), on an angle bracket.	2	0.15	200	59x39x29	15.00	4000	120x80x165	325.00

Omega holder is not included in the basic accessories of the lamp.

FT-038 LED

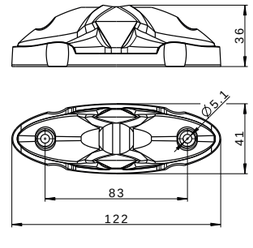

FT-038 I LED

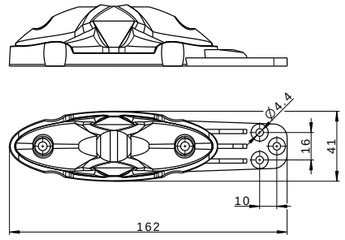

FT-038 II LED

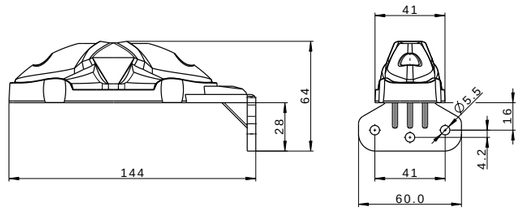

EMC E 9

3-functional universal **LED** clearanc lamp
- european **E9** homologation
- ElectroMagnetic Compatibility – **EMC** certificate
- shock-resistance – **PC** lampshade
- optional polarity connection

Lamp functions:
- white clearance light
- red clearance light
- yellow clearance light

Technical specification:
- supply voltage: **12–36V DC**
- operating temperature: **–40°C** to **+55°C**
- lamp is resistant to any weather conditions
- lamp is fully airtight

Power consumption / Rated power:
- 12V=0.08A/1W
- 24V=0.08A/2W

SM LED

ID/EAN	Photo		Description	Unit pack		Multipack / carton			Multipack / pallet		
				qty.	kg	qty.	cm	kg	qty.	cm	kg
FT-038 LED 5907556006430			LED clearance lamp, trifunctional, with a sidelight (front, tail and side), 0.5 m long cable.	2	0.15	250	59x39x29	18.75	5000	120x80x165	400.00
FT-038 LED *QS075 5907556006447			LED clearance lamp, trifunctional with a sidelight (front, tail and side), 0.5 m long cable with a QS075 type.	2	0.20	250	59x39x29	25.00	5000	120x80x165	525.00
FT-038 LED *QS150 5907556006454			LED clearance lamp, trifunctional with a sidelight (front, side and tail), 0.5 m long cable with a QS150 connector.	2	0.20	250	59x39x29	25.00	5000	120x80x165	525.00
FT-038 I LED 5907556006461		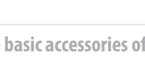	LED clearance lamp, trifunctional with a sidelight (front, side and tail), on an extended straight bracket, 0.5 m long cable.	2	0.15	200	59x39x29	15.00	4000	120x80x165	325.00
FT-038 II LED 5907556006492			LED clearance lamp, trifunctional with a sidelight (front, side and tail), on an angle bracket, 0.5 m long cable.	2	0.20	200	59x39x29	20.00	4000	120x80x165	425.00

Omega holder is not included in the basic accessories of the lamp.

WWW

EMC E 9

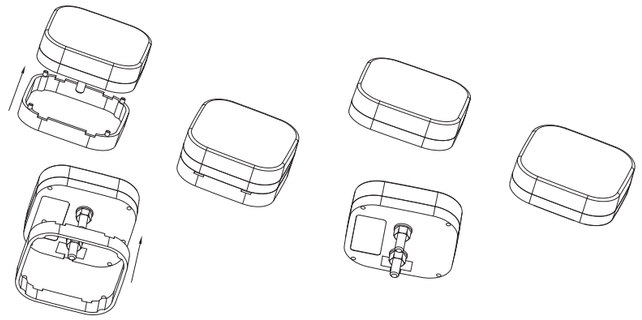

1-functional **LED** clearance lamp with a reflector
- european **E9** homologation
- ElectroMagnetic Compatibility – **EMC** certificate
- shock-resistance – **PC** lampshade
- optional polarity connection
- integrated 2x0.75 mm² cable

Lamp functions:
- clearance light

Technical specification:
- supply voltage: **12–36V DC**
- operating temperature: **–40°C** to **+55°C**
- lamp is resistant to any weather conditions
- lamp is fully airtight

Power consumption / Rated power:
- white or yellow clearance light:
12V= 0.04A/0.5W/24V=0.04A/1W
- red clearance light:
12V=0.03A/0.4W/24V=0.03A/0.8W

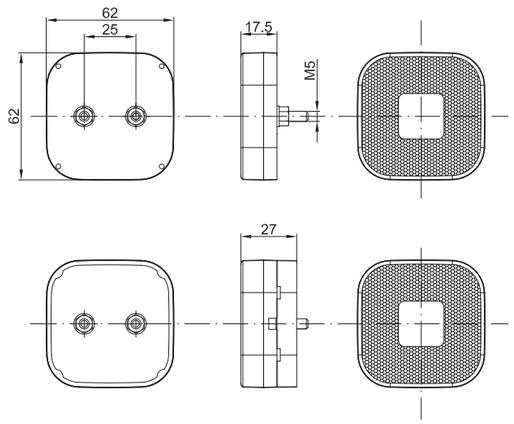

CAT SM LED

ID/EAN	Photo		Description	Unit pack		Multipack / carton			Multipack / pallet		
				qty.	kg	qty.	cm	kg	qty.	cm	kg
FT-027 B LED 5907556004948			White LED clearance lamp with a cable.	10	0.70	200	59x39x29	14.00	4000	120x80x165	305.00
FT-027 Z LED 5907556004962			Yellow LED clearance lamp with a cable.	10	0.70	200	59x39x29	14.00	4000	120x80x165	305.00
FT-027 C LED 5907556004955			Red LED clearance lamp with a cable.	0	0.70	200	59x39x29	14.00	4000	120x80x165	305.00

Omega holder is not included in the basic accessories of the lamp.

WWW

1-functional **LED** lamp
ElectroMagnetic Compatibility (**EMC**) homologation
shock-resistance – **PC** lampshade
Optional polarity connection
Lamp is equipped with the hermetic QS junction:
QS-150 FRISTOM

Lamp parameters:
- supply votlage – from **12V up to 15V DC**
- Operating tempereature: **–40°C** to **+55°C**
- effective (measured) light beam = **80 lm**
- lamp is resistant to any weather conditions
- lamp is fully airtight

Power consumption:
- 12V = 0.065A

Power consumption (rated power):
- 12V = 1W

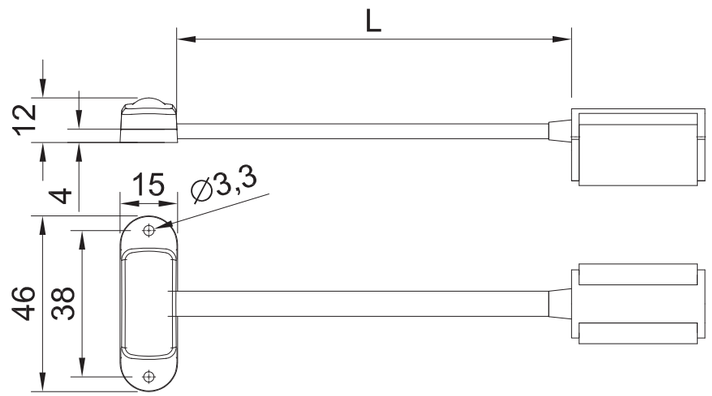

SM LED

ID/EAN	Photo		Description	Unit pack		Multipack / carton			Multipack / pallet		
				qty.	kg	qty.	cm	kg	qty.	cm	kg
FT-090 B LED QS150 M02 5907556010215			LED clearance lamp 12V, white, with 0.2 m cable and QS150 connector.	1	0.026	450	59x39x29	11.70	9000	120x80x165	259.00
FT-090 C LED QS150 M02 5907556010352			LED clearance lamp 12V, red, with 0.2 m cable and QS150 connector.	1	0.026	450	59x39x29	11.70	9000	120x80x165	259.00

LED clearance end decorative lamps

VIDEO

WWW

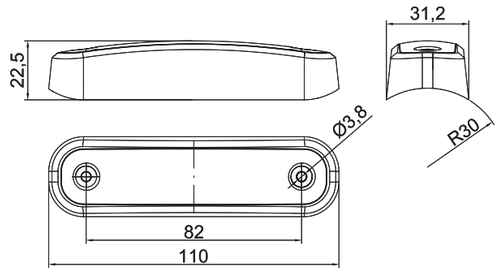

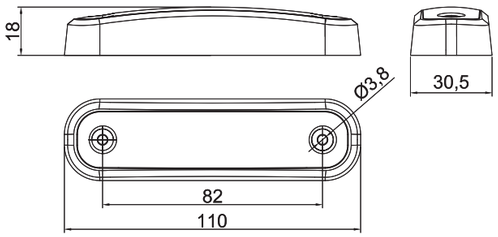

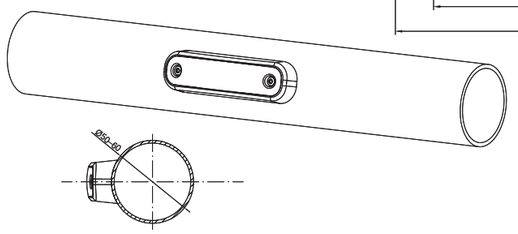

1-functional **LED** clearance lamp.
- european **E9** homologation for (white,red and yellow light)
- ElectroMagnetic Compatibility – **EMC** certificate
- shock-resistance – **PC** lampshade
- optional polarity connection

In a standard version the lamps are applied to be mounted on the flat surfaces.
Optionally the installation at the grille saver bull bars, bumper guards and body armors can be carried out by using a transparent **FT-045 PG T** rubber gasket that is not included in a standard version of the product.

Lamp functions:
- clearance light (white, yellow and red)
- decorative light (blue and green)

Technical specification:
- supply voltage: **12–36V DC**
- operating temperature: **–40°C** to **+55°C**
- lamp is resistant to any weather conditions
- lamp is fully airtight

Power consumption:
- clearance light: **12V/24V = 0.08A/0.08A**

Power consumption / Rated power:
- clearance light: **12V/24V = 1W/2W**

SM LED

ID/EAN	Photo	Description	Unit pack		Multipack / carton			Multipack / pallet		
			qty.	kg	qty.	cm	kg	qty.	cm	kg
FT-045 Z LED 5907556008342		Clearance marker LED lamp, yellow, 2x0.75 mm² cable (0.5 m).	10	0.0588	400	59x39x29	23.52	8000	120x80x165	495.40
FT-045 C LED 5907556008335		Clearance marker LED lamp, red, 2x0.75 mm² cable (0.5 m).	10	0.0588	400	59x39x29	23.52	8000	120x80x165	495.40
FT-045 B LED 5907556008328		Clearance marker LED lamp, white, 2x0.75 mm² cable (0.5 m).	10	0.0588	400	59x39x29	23.52	8000	120x80x165	495.40
FT-045 ZIEL LED 5907556008373		Decorative LED lamp, green, 2x0.75mm² cable (0.5m).	10	0.0588	400	59x39x29	23.52	8000	120x80x165	495.40
FT-045 N LED 5907556008366		Decorative LED lamp, blue, 2x0.75 mm² cable (0.5 m).	10	0.0588	400	59x39x29	23.52	8000	120x80x165	495.40
FT-045 PG T 5907556008359		Rubber gasket (transparent) for FT-045 LED mounted at grille saver bull bars, bumper guards and body armors.	10	0.22						

LED clearance 1-functional

WWW

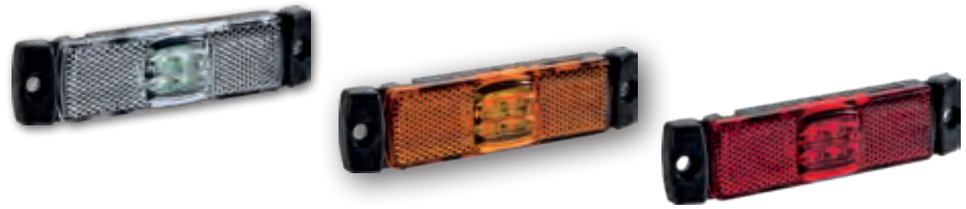

1-functional **LED** clearance lamp with a reflector
- european **E9** homologation
- ElectroMagnetic Compatibility – **EMC** certificate
- shock-resistance – **PC** lampshade
- optional polarity connection
- integrated 2x0.75 mm² cable

Lamp functions:
- clearance light

Technical specification:
- supply voltage: **12–36V DC**
- operating temperature: **–40°C** to **+55°C**
- lamp is resistant to any weather conditions
- lamp is fully airtight

Power consumption / Rated power:
- white or yellow clearance light: **12V= 0.04A/0.5W/24V=0.04A/1W**
- red clearance light: **12V=0.03A/0.4W/24V=0.03A/0.8W**

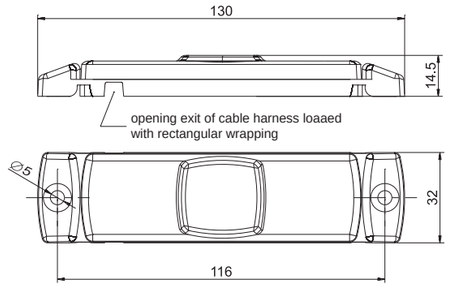

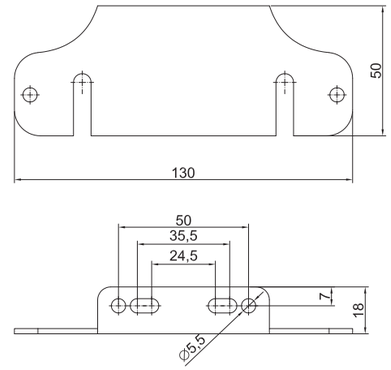

CAT SM LED

ID/EAN	Photo		Description	Unit pack		Multipack / carton			Multipack / pallet		
				qty.	kg	qty.	cm	kg	qty.	cm	kg
FT-017 B LED 5907556001725			White LED clearance lamp with a cable.	10	0.51	350	59x39x29	17.85	7000	120x80x165	382.00
FT-017 B LED *QS075 5907556004412			White LED clearance lamp with a cable and a QS075 connector.	10	0.56	400	59x39x29	22.40	8000	120x80x165	473.00
FT-017 B LED *QS150 5907556001732			White LED clearance lamp with a cable and a QS150 connector.	10	0.56	400	59x39x29	22.40	8000	120x80x165	473.00
FT-017 Z LED 5907556001763			Yellow LED clearance lamp with a cable.	10	0.51	350	59x39x29	17.85	7000	120x80x165	382.00
FT-017 Z LED *QS075 5907556004450			Yellow LED clearance lamp with a cable and a QS075 connector.	10	0.56	400	59x39x29	22.40	8000	120x80x165	473.00
FT-017 Z LED *QS150 5907556001817			Yellow LED clearance lamp with a cable and a QS150 connector.	10	0.56	400	59x39x29	22.40	8000	120x80x165	473.00
FT-017 C LED 5907556001800			Red LED clearance lamp with a cable.	10	0.51	350	59x39x29	17.85	7000	120x80x165	382.00
FT-017 C LED *QS075 5907556004436			Red LED clearance lamp with a cable and a QS075 connector.	10	0.56	400	59x39x29	22.40	8000	120x80x165	473.00
FT-017 C LED *QS150 5907556001770			Red LED clearance lamp with a cable and a QS150 connector.	10	0.56	400	59x39x29	22.40	8000	120x80x165	473.00
KAT FT-017/FT-018 5907556002678			Angle holder for FT-017 / FT-018 clearance lamps. Both sides mounting possibility.	10	0.20						

Omega holder is not included in the basic accessories of the lamp.

WWW

EMC E 9

1-functional **LED** clearance lamp with a reflector
- european **E9** homologation
- ElectroMagnetic Compatibility – **EMC** certificate
- shock-resistance – **PC** lampshade
- optional polarity connection
- integrated 2x0.75 mm² cable

Lamp functions:
- clearance light

Technical specification:
- supply voltage: **12–36V DC**
- operating temperature: **–40°C** to **+55°C**
- lamp is resistant to any weather conditions
- lamp is fully airtight

Power consumption / Rated power:
- white or yellow clearance light: **12V= 0.04A/0.5W/24V=0.04A/1W**
- red clearance light: **12V=0.03A/0.4W/24V=0.03A/0.8W**

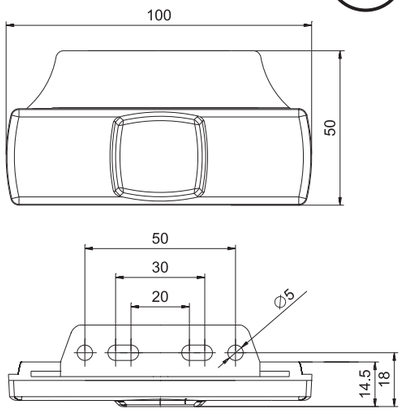

CAT SM LED

ID/EAN	Photo		Description	Unit pack		Multipack / carton			Multipack / pallet		
				qty.	kg	qty.	cm	kg	qty.	cm	kg
FT-017 B+K LED 5907556001749			White LED clearance lamp with an angle holder and a cable.	10	0.53	350	59x39x29	18.55	7000	120x80x165	396.00
FT-017 B+K LED *QS075 5907556004429			White LED clearance lamp with an angle holder, cable and a QS075 connector.	10	0.58	400	59x39x29	23.20	8000	120x80x165	489.00
FT-017 B+K LED *QS150 5907556001756			White LED clearance lamp with an angle holder, cable and a QS150 connector.	10	0.58	400	59x39x29	23.20	8000	120x80x165	489.00
FT-017 Z+K LED 5907556001787			Yellow LED clearance lamp with an angle holder and a cable.	10	0.53	350	59x39x29	18.55	7000	120x80x165	396.00
FT-017 Z+K LED *QS075 5907556004467			Yellow LED clearance lamp with an angle holder, cable and a QS075 connector.	10	0.58	400	59x39x29	23.20	8000	120x80x165	489.00
FT-017 Z+K LED *QS150 5907556001831			Yellow LED clearance lamp with an angle holder, cable and a QS150 connector.	10	0.58	400	59x39x29	23.20	8000	120x80x165	489.00
FT-017 C+K LED 5907556001824			Red LED clearance lamp with an angle holder and a cable.	10	0.53	350	59x39x29	18.55	7000	120x80x165	396.00
FT-017 C+K LED *QS075 5907556004443			Red LED clearance lamp with an angle holder, cable and a QS075 connector.	10	0.58	400	59x39x29	23.20	8000	120x80x165	489.00
FT-017 C+K LED *QS150 5907556001794			Red LED clearance lamp with an angle holder, cable and a QS150 connector.	10	0.58	400	59x39x29	23.20	8000	120x80x165	489.00

Omega holder is not included in the basic accessories of the lamp.

WWW

EMC E 9

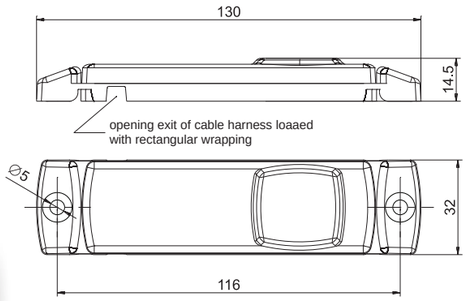

1- functional **LED** clearance lamp with a reflector
- european **E9** homologation
- ElectroMagnetic Compatibility – **EMC** certificate
- shock-resistance – **PC** lampshade
- optional polarity connection
- integrated 2x0.75 mm² cable

Lamp functions:
- clearance light

Technical specification:
- supply voltage: **12–36V DC**
- operating temperature: **–40°C** to **+55°C**
- lamp is resistant to any weather conditions
- lamp is fully airtight

Power consumption / Rated power:
- white or yellow clearance light
12V= 0.04A/0.5W/24V=0.04A/1W
- red clearance light
12V=0.03A/0.4W/24V=0.03A/0.8W

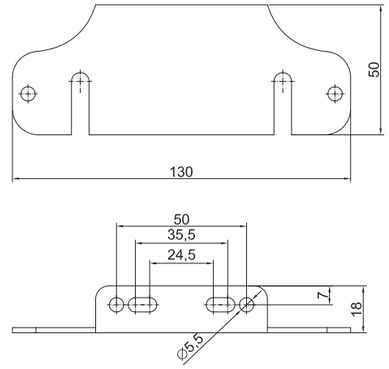

CAT SM LED

ID/EAN	Photo		Description	Unit pack		Multipack / carton			Multipack / pallet		
				qty.	kg	qty.	cm	kg	qty.	cm	kg
FT-018 B LED 5907556001848			White LED clearance lamp with a cable.	10	0.51	350	59x39x29	17.85	7000	120x80x165	382.00
FT-018 B LED *QS075 5907556004474			White LED clearance lamp with a cable and a QS075 connector.	10	0.56	400	59x39x29	22.40	8000	120x80x165	473.00
FT-018 B LED *QS150 5907556001855			White LED clearance lamp with a cable and a QS150 connector.	10	0.56	400	59x39x29	22.40	8000	120x80x165	473.00
FT-018 Z LED 5907556001886			Yellow LED clearance lamp with a cable.	10	0.51	350	59x39x29	17.85	7000	120x80x165	382.00
FT-018 Z LED *QS075 5907556004498			Yellow LED clearance lamp with a cable and a QS075 connector.	10	0.56	400	59x39x29	22.40	8000	120x80x165	473.00
FT-018 Z LED *QS150 5907556001893			Yellow LED clearance lamp with a cable and a QS150 connector.	10	0.56	400	59x39x29	22.40	8000	120x80x165	473.00
FT-018 C LED 5907556001862			Red LED clearance lamp with a cable.	10	0.51	350	59x39x29	17.85	7000	120x80x165	382.00
FT-018 C LED *QS075 5907556004481			Red LED clearance lamp with a cable and a QS075 connector.	10	0.56	400	59x39x29	22.40	8000	120x80x165	473.00
FT-018 C LED *QS150 5907556001879			Red LED clearance lamp with a cable and a QS150 connector.	10	0.56	400	59x39x29	22.40	8000	120x80x165	473.00
KAT FT-017/FT-018 5907556002678			Angle holder for FT-017 / FT-018 clearance lamps. Both sides mounting possibility.	10	0.20						

Omega holder is not included in the basic accessories of the lamp.

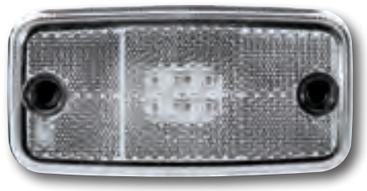

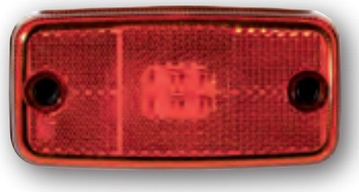

WWW

EMC E 9

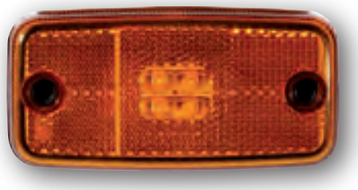

1-functional **LED** clearance lamp with a reflector
- european **E9** homologation
- ElectroMagnetic Compatibility – **EMC** certificate
- shock-resistance – **PC** lampshade
- optional polarity connection
- integrated 2x0.75 mm² cable

Lamp functions:
- clearance light

Technical specification:
- supply voltage: **12–36V DC**
- operating temperature: **–40°C** to **+55°C**
- lamp is resistant to any weather conditions
- lamp is fully airtight

Power consumption / Rated power:
- white or yellow clearance light
12V= 0.04A/0.5W/24V=0.04A/1W
- red clearance light
12V=0.03A/0.4W/24V=0.03A/0.8W

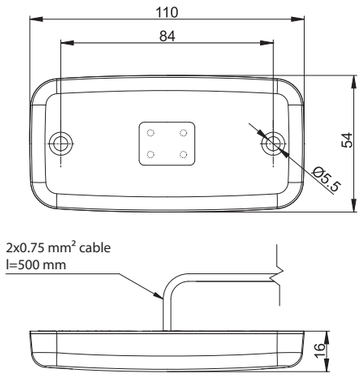

CAT SM LED

ID/EAN	Photo		Description	Unit pack		Multipack / carton			Multipack / pallet		
				qty.	kg	qty.	cm	kg	qty.	cm	kg
FT-019 B LED 5907556001909			White LED clearance lamp with a cable.	10	0.51	300	59x39x29	15.30	6000	120x80x165	331.00
FT-019 Z LED 5907556001985			Yellow LED clearance lamp with a cable.	10	0.51	300	59x39x29	15.30	6000	120x80x165	331.00
FT-019 Z LED *QS075 5907556004542			Yellow LED clearance lamp with a cable and a QS075 connector.	10	0.56	300	59x39x29	16.80	6000	120x80x165	361.00
FT-019 Z LED *QS150 5907556001992			Yellow LED clearance lamp with a cable and a QS150 connector.	10	0.56	300	59x39x29	16.80	6000	120x80x165	361.00
FT-019 C LED 5907556001947			Red LED clearance lamp with a cable.	10	0.51	300	59x39x29	15.30	6000	120x80x165	331.00
KAT FT-019 5907556005587			Angle handle for **FT-19** clearance lamps.	10	0.20						

Omega holder is not included in the basic accessories of the lamp.

WWW

EMC E 9

1-functional **LED** clearance lamp with a reflector
- european **E9** homologation
- ElectroMagnetic Compatibility – **EMC** certificate
- shock-resistance – **PC** lampshade
- optional polarity connection
- integrated 2x0.75 mm² cable

Lamp functions:
- clearance light

Technical specification:
- supply voltage: **12–36V DC**
- operating temperature: **–40°C** to **+55°C**
- lamp is resistant to any weather conditions
- lamp is fully airtight

Power consumption / Rated power:
- white or yellow clearance light
12V= 0.04A/0.5W/24V=0.04A/1W
- red clearance light
12V=0.03A/0.4W/24V=0.03A/0.8W

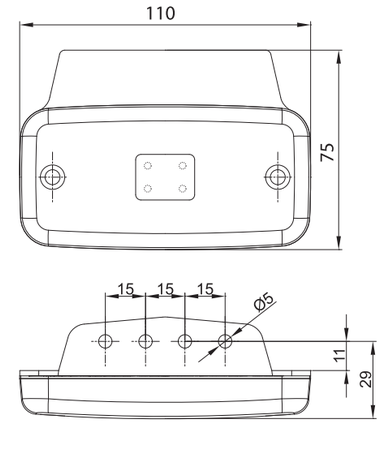

CAT SM LED

ID/EAN	Photo		Description	Unit pack		Multipack / carton			Multipack / pallet		
				qty.	kg	qty.	cm	kg	qty.	cm	kg
FT-019 B+K LED 5907556001923			White LED clearance lamp with an angle holder and a cable.	10	0.95	200	59x39x29	19.00	4000	120x80x165	405.00
FT-019 B+K LED *QS075 5907556004511			White LED clearance lamp with an angle holder, a cable and a QS075 connector.	10	1.00	200	59x39x29	20.00	4000	120x80x165	425.00
FT-019 B+K LED *QS150 5907556001930			White LED clearance lamp with an angle holder, a cable and a QS150 connector.	10	1.00	200	59x39x29	20.00	4000	120x80x165	425.00
FT-019 Z+K LED 5907556002005			Yellow LED clearance lamp with an angle holder and a cable.	10	0.95	200	59x39x29	19.00	4000	120x80x165	405.00
FT-019 Z+K LED *QS075 5907556004559			Yellow LED clearance lamp with an angle holder, a cable and a QS075 connector.	10	1.00	200	59x39x29	20.00	4000	120x80x165	425.00
FT-019 Z+K LED *QS150 5907556002012			Yellow LED clearance lamp with an angle holder, a cable and a QS150 connector.	10	1.00	200	59x39x29	20.00	4000	120x80x165	425.00
FT-019 C+K LED 5907556001961	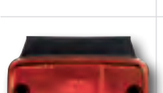		Red LED clearance lamp with a cable.	10	0.95	200	59x39x29	19.00	4000	120x80x165	405.00
FT-019 C+K LED *QS150 5907556001978			Red LED clearance lamp with an angle holder, a cable and a QS150 connector.	10	1.00	200	59x39x29	20.00	4000	120x80x165	425.00

Omega holder is not included in the basic accessories of the lamp.

LED clearance 1-functional

WWW

1-functional **LED** clearance lamp with a reflector
- european **E9** homologation
- ElectroMagnetic Compatibility – **EMC** certificate
- shock-resistance – **PC** lampshade
- optional polarity connection
- integrated 2x0.75 mm² cable

Lamp functions:
- clearance light

Technical specification:
- supply voltage: **12–36V DC**
- operating temperature: **–40°C** to **+55°C**
- lamp is resistant to any weather conditions
- lamp is fully airtight

Power consumption / Rated power:
- white or yellow clearance light
12V= 0.04A/0.5W/24V=0.04A/1W
- red clearance light
12V=0.03A/0.4W/24V=0.03A/0.8W

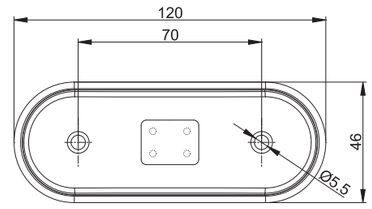

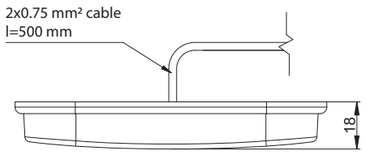

CAT SM LED

ID/EAN	Photo		Description	Unit pack qty.	Unit pack kg	Multipack / carton qty.	Multipack / carton cm	Multipack / carton kg	Multipack / pallet qty.	Multipack / pallet cm	Multipack / pallet kg
FT-020 B LED 5907556002029			White LED clearance lamp with a cable.	10	0.65	250	59x39x29	16.25	5000	120x80x165	350.00
FT-020 B LED *QS075 5907556004566			White LED clearance lamp with a cable and a QS075 connector.	10	0.70	300	59x39x29	21.00	6000	120x80x165	445.00
FT-020 B LED *QS150 5907556006881			White LED clearance lamp with a cable and a QS150 connector.	10	0.70	300	59x39x29	21.00	6000	120x80x165	445.00
FT-020 Z LED 5907556002104			Yellow LED clearance lamp with a cable.	10	0.65	250	59x39x29	16.25	5000	120x80x165	350.00
FT-020 Z LED *QS075 5907556004603			Yellow LED clearance lamp with a cable and a QS075 connector.	10	0.70	300	59x39x29	21.00	6000	120x80x165	445.00
FT-020 Z LED *QS150 5907556006898			Yellow LED clearance lamp with a cable and a QS150 connector.	10	0.70	300	59x39x29	21.00	6000	120x80x165	445.00
FT-020 C LED 5907556002067			Red LED clearance lamp with a cable.	10	0.65	250	59x39x29	16.25	5000	120x80x165	350.00
FT-020 C LED *QS075 5907556004580			Red LED clearance lamp with a cable and a QS075 connector.	10	0.70	300	59x39x29	21.00	6000	120x80x165	445.00
FT-020 C LED *QS150 5907556006904			Red LED clearance lamp with a cable and a QS150 connector.	10	0.70	300	59x39x29	21.00	6000	120x80x165	445.00
KAT FT-020 5907556005594			Angle handle for **FT-020** clearance lamps.	10	0.20						

Omega holder is not included in the basic accessories of the lamp.

WWW

1-functional **LED** clearance lamp with a reflector
- european **E9** homologation
- ElectroMagnetic Compatibility – **EMC** certificate
- shock-resistance – **PC** lampshade
- optional polarity connection
- integrated 2x0.75 mm² cable

Lamp functions:
- clearance light

Technical specification:
- supply voltage: **12–36V DC**
- operating temperature: **–40°C** to **+55°C**
- lamp is resistant to any weather conditions
- lamp is fully airtight

Power consumption / Rated power:
- white or yellow clearance light
12V= 0.04A/0.5W/24V=0.04A/1W
- red clearance light
12V=0.03A/0.4W/24V=0.03A/0.8W

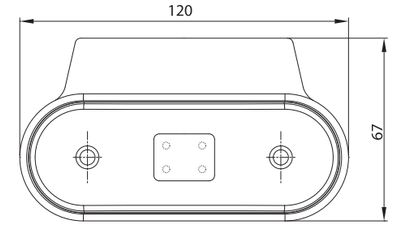

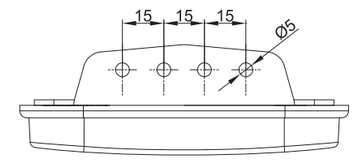

CAT SM LED

ID/EAN	Photo		Description	Unit pack qty.	Unit pack kg	Multipack / carton qty.	Multipack / carton cm	Multipack / carton kg	Multipack / pallet qty.	Multipack / pallet cm	Multipack / pallet kg
FT-020 B+K LED 5907556002043			White LED clearance lamp with an angle holder and a cable.	10	0.85	200	59x39x29	17.00	4000	120x80x165	365.00
FT-020 B+K LED *QS075 5907556004573			White LED clearance lamp with an angle holder, a cable and a QS075 connector.	10	0.90	200	59x39x29	18.00	4000	120x80x165	385.00
FT-020 B+K LED *QS150 5907556002050			White LED clearance lamp with an angle holder, a cable and a QS150 connector.	10	0.90	200	59x39x29	18.00	4000	120x80x165	385.00
FT-020 Z+K LED 5907556002128			Yellow LED clearance lamp with an angle holder and a cable.	10	0.85	200	59x39x29	17.00	4000	120x80x165	365.00
FT-020 Z+K LED *QS075 5907556004610			Yellow LED clearance lamp with an angle holder, a cable and a QS075 connector.	10	0.90	200	59x39x29	18.00	4000	120x80x165	385.00
FT-020 Z+K LED *QS150 5907556002135			Yellow LED clearance lamp with an angle holder, a cable and a QS150 connector.	10	0.90	200	59x39x29	18.00	4000	120x80x165	385.00
FT-020 C+K LED 5907556002067			Red LED clearance lamp with a cable.	10	0.85	200	59x39x29	17.00	4000	120x80x165	365.00
FT-020 C+K LED *QS075 5907556004597			Red LED clearance lamp with an angle holder, a cable and a QS075 connector.	10	0.90	200	59x39x29	18.00	4000	120x80x165	385.00
FT-020 C+K LED *QS150 5907556002098			Red LED clearance lamp with an angle holder, a cable and a QS150 connector.	10	0.90	200	59x39x29	18.00	4000	120x80x165	385.00

Omega holder is not included in the basic accessories of the lamp.

EMC E 9

WWW

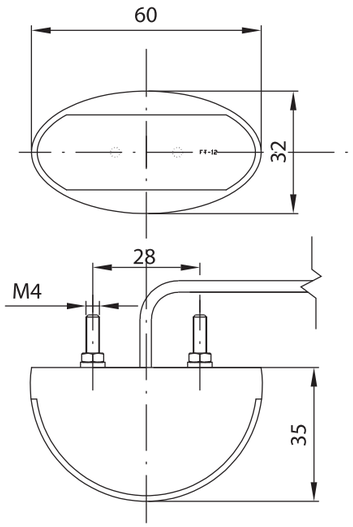

1-functional **LED** clearance lamp
- european **E9** homologation
- ElectroMagnetic Compatibility – **EMC** certificate
- shock-resistance – **PC** lampshade
- optional polarity connection
- integrated 2x0.75 mm² cable

Lamp functions:
- clearance light

Technical specification:
- supply voltage: **12–36V DC**
- operating temperature: **–40°C** to **+55°C**
- lamp is resistant to any weather conditions
- lamp is fully airtight

Power consumption / Rated power:
- clearance light: **12V=0.02A/0.25W/24V=0.02A/0.5W**

SM LEC

ID/EAN	Photo		Description	Unit pack		Multipack / carton			Multipack / pallet		
				qty.	kg	qty.	cm	kg	qty.	cm	kg
FT-012 B LED 5907556001411			White LED clearance lamp with a cable.	10	0.58	400	59x39x29	23.20	8000	120x80x165	489.00
FT-012 Z LED 5907556001459			Yellow LED clearance lamp with a cable.	10	0.58	400	59x39x29	23.20	8000	120x80x165	489.00
FT-012 C LED 5907556001435			Red LED clearance lamp with a cable.	10	0.58	400	59x39x29	23.20	8000	120x80x165	489.00

Omega holder is not included in the basic accessories of the lamp.

WWW

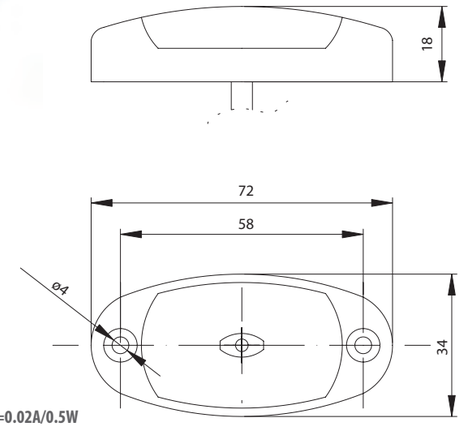

1-functional **LED** clearance lamp
- european **E9** homologation
- ElectroMagnetic Compatibility – **EMC** certificate
- shock-resistance – **PC** lampshade
- optional polarity connection
- integrated 2x0.75 mm² cable

Lamp functions:
- clearance light

Technical specification:
- supply voltage: **12–36V DC**
- operating temperature: **–40°C** to **+55°C**
- lamp is resistant to any weather conditions
- lamp is fully airtight

Power consumption / Rated power:
- yellow or red clearance light: **12V=0.02A/0.25W/24V=0.02A/0.5W**
- white clearance light: **12V=0.04A/0.5W/24V=0.04A/1W**

EMC E 9

SM LEC

ID/EAN	Photo		Description	Unit pack		Multipack / carton			Multipack / pallet		
				qty.	kg	qty.	cm	kg	qty.	cm	kg
FT-025 B LED 5907556004801	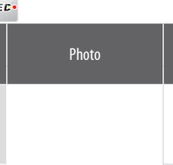		White LED clearance lamp with a cable.	10	0.35	500	59x39x29	17.50	10000	120x80x165	375.00
FT-025 B LED *QS075 5907556004832			White LED clearance lamp with a cable and a QS075 connector.	10	0.40	500	59x39x29	20.00	10000	120x80x165	425.00
FT-025 B LED *QS150 5907556004863			White LED clearance lamp with a cable and a QS150 connector.	10	0.40	500	59x39x29	20.00	10000	120x80x165	425.00
FT-025 Z LED 5907556004825			Yellow LED clearance lamp with a cable.	10	0.35	500	59x39x29	17.50	10000	120x80x165	375.00
FT-025 Z LED *QS075 5907556004856			Yellow LED clearance lamp with a cable and a QS075 connector.	10	0.40	500	59x39x29	20.00	10000	120x80x165	425.00
FT-025 Z LED *QS150 5907556004887			Yellow LED clearance lamp with a cable and a QS150 connector.	10	0.40	500	59x39x29	20.00	10000	120x80x165	425.00
FT-025 C LED 5907556004818			Red LED clearance lamp with a cable.	10	0.35	500	59x39x29	17.50	10000	120x80x165	375.00
FT-025 C LED *QS075 5907556004849			Red LED clearance lamp with a cable and a QS075 connector.	10	0.40	500	59x39x29	20.00	10000	120x80x165	425.00
FT-025 C LED *QS150 5907556004870			Red LED clearance lamp with a cable and a QS150 connector.	10	0.40	500	59x39x29	20.00	10000	120x80x165	425.00

Omega holder is not included in the basic accessories of the lamp.

LED clearance end decorative lamps

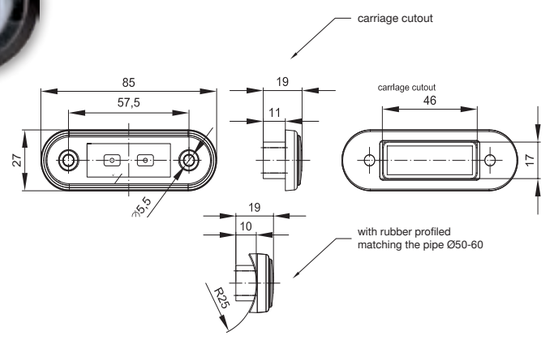

WWW

EMC E 9

1-functional **LED** clearance lamp
- european **E9** homologation
- ElectroMagnetic Compatibility – **EMC** certificate
- shock-resistance – **PC** lampshade
- integrated 2x0.75 mm² cable

In a standard version the lamps are applied to be mounted on the flat surfaces using the black rubber.
Optionaly the installation at the grille saver bull bars, bumper guards and body armors may be carried out by using a transparent or black **FT-015 PGC/T** rubber gaskets that are not included in the standard version of the product.

Lamp functions:
- red, white or yellow clearance light
- blue or green decorative light

Technical specification:
- supply voltage: **12–36V DC**
- operating temperature: **–40°C** to **+55°C**
- lamp is resistant to any weather conditions
- lamp is fully airtight

Power consumption / Rated power:
- clearance light:
12V=0.02A/0.25W/24V=0.02A/0.5W

SM LED

ID/EAN	Photo		Description	Unit pack		Multipack / carton			Multipack / pallet		
				qty.	kg	qty.	cm	kg	qty.	cm	kg
FT-015 B LED 5907556001565			White LED clearance lamp with a cable.	10	0.41	350	59x39x29	14.35	7000	120x80x165	312.00
FT-015 B LED *QS075 5907556004245			White LED clearance lamp with a cable and a QS075 connector.	10	0.46	400	59x39x29	18.40	8000	120x80x165	393.00
FT-015 B LED *QS150 5907556001572			White LED clearance lamp with a cable and a QS150 connector.	10	0.46	400	59x39x29	18.40	8000	120x80x165	393.00
FT-015 Z LED 5907556001640			Yellow LED clearance lamp with a cable.	10	0.41	350	59x39x29	14.35	7000	120x80x165	312.00
FT-015 Z LED *QS075 5907556004283			Yellow LED clearance lamp with a cable and a QS075 connector.	10	0.46	400	59x39x29	18.40	8000	120x80x165	393.00
FT-015 Z LED *QS150 5907556001657			Yellow LED clearance lamp with a cable and a QS150 connector.	10	0.46	400	59x39x29	18.40	8000	120x80x165	393.00
FT-015 C LED 5907556001602			Red LED clearance lamp with a cable.	10	0.41	350	59x39x29	14.35	7000	120x80x165	312.00
FT-015 C LED *QS075 5907556004269			Red LED clearance lamp with a cable and a QS075 connector.	10	0.46	400	59x39x29	18.40	8000	120x80x165	393.00
FT-015 C LED *QS150 5907556001619			Red LED clearance lamp with a cable and a QS150 connector.	10	0.46	400	59x39x29	18.40	8000	120x80x165	393.00
FT-015 N LED 5907556007215			Decorative LED lamp, blue, 2x0.75 mm² cable (0.5 m).	10	0.41	350	59x39x29	14.35	7000	120x80x165	312.00
FT-015 ZIEL LED 5907556005570			Decorative LED lamp, green, 2x0.75 mm² cable (0.5 m).	10	0.41	350	59x39x29	14.35	7000	120x80x165	312.00
FT-015 PG C 5907556008007			Rubber black gasket for mounting FT-015 LED clearance lamps on tube grill guards and bull bars.	10	0.008						
FT-015 PG T 5907556008014			Rubber transparent gasket for mounting FT-015 LED clearance lamps on tube grill guards and bull bars.	10	0.008						
FT-015 PG T PL			Rubber gasket (transparent) for FT-015 LED to be mounted at grille saver bull bars, bumper guards and body armors.	10	0.008						

Omega holder is not included in the basic accessories of the lamp.

LED clearance 1-functional

WWW

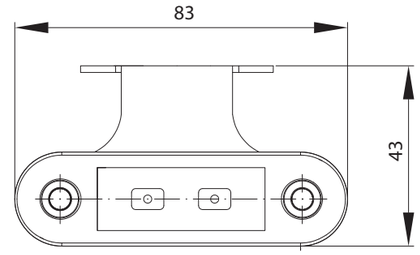

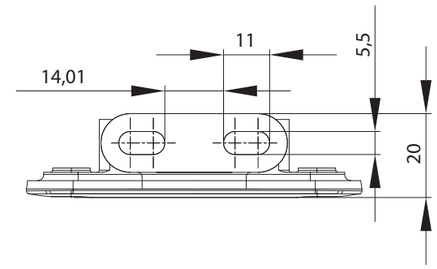

EMC E 9

1-functional **LED** clearance lamp
- european **E9** homologation
- ElectroMagnetic Compatibility – **EMC** certificate
- shock-resistance – **PC** lampshade
- optional polarity connection
- integrated 2x0.75 mm² cable

Lamp functions:
- clearance light

Technical specification:
- supply voltage: **12–36V DC**
- operating temperature: **–40°C** to **+55°C**
- lamp is resistant to any weather conditions
- lamp is fully airtight

Power consumption / Rated power:
- clearance light: **12V=0.02A/0.25W/24V=0.02A/0.5W**

SM LED

ID/EAN	Photo		Description	Unit pack		Multipack / carton			Multipack / pallet		
				qty.	kg	qty.	cm	kg	qty.	cm	kg
FT-015 B+K LED 5907556001589			White LED clearance lamp with an angle holder and a cable.	10	0.54	400	59x39x29	21.60	8000	120x80x165	457.00
FT-015 Z+K LED 5907556001664			Yellow LED clearance lamp with an angle holder and a cable.	10	0.54	400	59x39x29	21.60	8000	120x80x165	457.00
FT-015 C LED 5907556001626			Red LED clearance lamp with an angle holder and a cable.	10	0.54	400	59x39x29	21.60	8000	120x80x165	457.00

Omega holder is not included in the basic accessories of the lamp.

EMC E9

WWW

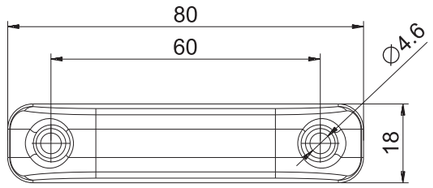

1-functional **LED** clearance lamp
- european **E9** homologation
- ElectroMagnetic Compatibility – **EMC** certificate
- shock-resistance – **PC** lampshade
- optional polarity connection
- integrated 2x0.75 mm² cable

Lamp functions:
- clearance light

Technical specification:
- supply voltage: **12–36V DC**
- operating temperature: **–40°C** to **+55°C**
- lamp is resistant to any weather conditions
- lamp is fully airtight

Power consumption / Rated power
- clearance light: **12V=0.02A/0.25W/24V=0.02A/0.5W**

SM LED

ID/EAN	Photo		Description	Unit pack		Multipack / carton			Multipack / pallet		
				qty.	kg	qty.	cm	kg	qty.	cm	kg
FT-013 B LED 5907556001473			White LED clearance lamp with a cable.	10	0.48	400	59x39x29	19.20	8000	120x80x165	409.00
FT-013 Z LED 5907556001534			Yellow LED clearance lamp with a cable.	10	0.48	400	59x39x29	19.20	8000	120x80x165	409.00
FT-013 C LED 5907556001503			Red LED clearance lamp with a cable.	10	0.48	400	59x39x29	19.20	8000	120x80x165	409.00

Omega holder is not included in the basic accessories of the lamp.

WWW

EMC E9

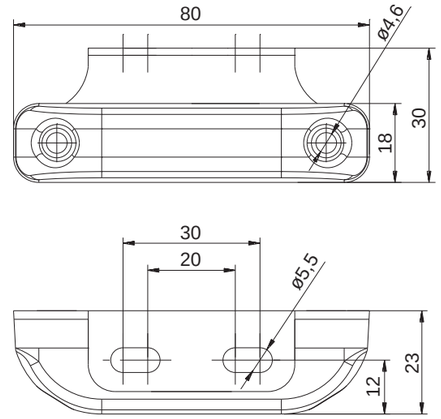

1-functional **LED** clearance lamp
- european **E9** homologation
- ElectroMagnetic Compatibility – **EMC** certificate
- shock-resistance – **PC** lampshade
- optional polarity connection
- integrated 2x0.75 mm² cable

Lamp functions:
- clearance light

Technical specification:
- supply voltage: **12–36V DC**
- operating temperature: **–40°C** to **+55°C**
- lamp is resistant to any weather conditions
- lamp is fully airtight

Power consumption / Rated power:
- clearance light: **12V=0.02A/0.25W/24V=0.02A/0.5W**

SM LED

ID/EAN	Photo		Description	Unit pack		Multipack / carton			Multipack / pallet		
				qty.	kg	qty.	cm	kg	qty.	cm	kg
FT-013 B+K LED 5907556001497			White LED clearance lamp with an angle holder and a cable.	10	0.56	400	59x39x29	22.40	7200	120x80x165	428.20
FT-013 Z+K LED 5907556001558			Yellow LED clearance lamp with an angle holder and a cable.	10	0.56	400	59x39x29	22.40	7200	120x80x165	428.20
FT-013 C+K LED 5907556001527			Red LED clearance lamp with a cable.	10	0.56	400	59x39x29	22.40	7200	120x80x165	428.20

Omega holder is not included in the basic accessories of the lamp.

LED clearance 1-functional

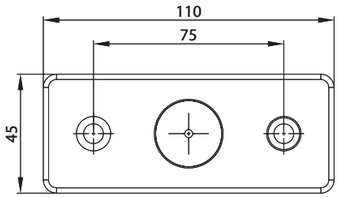

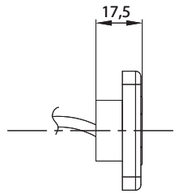

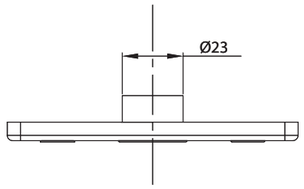

WWW

1-functional **LED** clearance lamp with a reflector
- european **E9** homologation
- ElectroMagnetic Compatibility – **EMC** certificate
- shock-resistance – **PC** lampshade
- optional polarity connection
- integrated 2x0.75 mm² cable

Lamp functions:
- clearance light

Technical specification:
- supply voltage: **12–36V DC**
- operating temperature: **–40°C** to **+55°C**
- lamp is resistant to any weather conditions
- lamp is fully airtight

Power consumption / Rated power:
- yellow or red clearance light: **12V=0.02A/0.25W/24V=0.02A/0.5W**
- white clearance light: **12V=0.04A/0.5W/24V=0.04A/1W**

EMC E 9

CAT SM LED

ID/EAN	Photo		Description	Unit pack		Multipack / carton			Multipack / pallet		
				qty.	kg	qty.	cm	kg	qty.	cm	kg
MD-013 B LED 5907556002944			White LED clearance lamp with a cable.	10	0.73	300	59x39x29	21.90	6000	120x80x165	463.00
MD-013 B LED *QS075 5907556004627			White LED clearance lamp with a cable and a QS075 connector.	10	0.83	300	59x39x29	24.90	6000	120x80x165	523.00
MD-013 B LED *QS150 5907556002975			White LED clearance lamp with a cable and a QS150 connector.	10	0.83	300	59x39x29	24.90	6000	120x80x165	523.00
MD-013 Z LED 5907556003248			Yellow LED clearance lamp with a cable.	10	0.73	300	59x39x29	21.90	6000	120x80x165	463.00
MD-013 Z LED *QS075 5907556004740			Yellow LED clearance lamp with a cable and a QS075 connector.	10	0.83	300	59x39x29	24.90	6000	120x80x165	523.00
MD-013 Z LED *QS150 5907556003279			Yellow LED clearance lamp with a cable and a QS150 connector.	10	0.83	300	59x39x29	24.90	6000	120x80x165	523.00
MD-013 C LED 5907556003095			Red LED clearance lamp with a cable.	10	0.73	300	59x39x29	21.90	6000	120x80x165	463.00
MD-013 C LED *QS075 5907556004689			Red LED clearance lamp with a cable and a QS075 connector.	10	0.83	300	59x39x29	24.90	6000	120x80x165	523.00
MD-013 C LED *QS150 5907556003125			Red LED clearance lamp with a cable and a QS150 connector.	10	0.83	300	59x39x29	24.90	6000	120x80x165	523.00
KAT MD-013 5907556007031			Angle handle for **MD-013** lamps.	10	0.20						

Omega holder is not included in the basic accessories of the lamp.

WWW

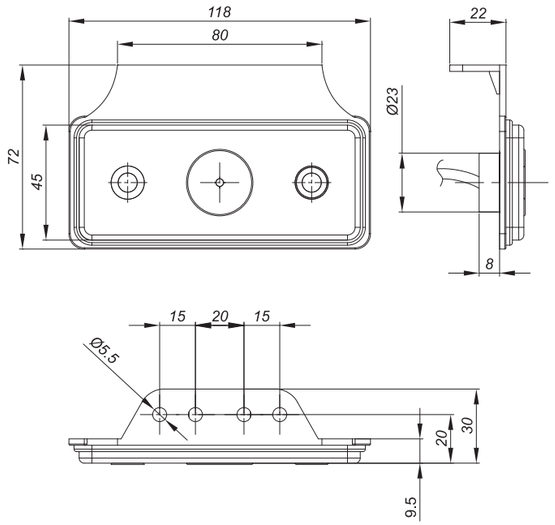

1-functional **LED** clearance lamp with a reflector
- european **E9** homologation
- ElectroMagnetic Compatibility – **EMC** certificate
- shock-resistance – **PC** lampshade
- optional polarity connection
- integrated 2x0.75 mm² cable

Lamp functions:
- clearance light

Technical specification:
- supply voltage: **12–36V DC**
- operating temperature: **–40°C** to **+55°C**
- lamp is resistant to any weather conditions
- lamp is fully airtight

Power consumption / Rated power:
- yellow or red clearance light: **12V=0.02A/0.25W/24V=0.02A/0.5W**
- white clearance light: **12V=0.04A/0.5W/24V=0.04A/1W**

EMC E 9

CAT SM LED

ID/EAN	Photo		Description	Unit pack		Multipack / carton			Multipack / pallet		
				qty.	kg	qty.	cm	kg	qty.	cm	kg
MD-013 B+K LED 5907556003019			White LED clearance lamp with an angle holder and a cable.	10	0.75	200	59x39x29	15.00	3200	120x80x165	265.00
MD-013 B+K LED *QS075 5907556004658			White LED clearance lamp with an angle holder, a cable and a QS075 connector.	10	0.85	200	59x39x29	17.00	3200	120x80x165	297.00
MD-013 B+K LED *QS150 5907556003040			White LED clearance lamp with an angle holder, a cable and a QS150 connector.	10	0.85	200	59x39x29	17.00	3200	120x80x165	297.00
MD-013 Z+K LED 5907556003316			Yellow LED clearance lamp with an angle holder and a cable.	10	0.75	200	59x39x29	15.00	3200	120x80x165	265.00
MD-013 Z+K LED *QS075 5907556004771			Yellow LED clearance lamp with an angle holder, a cable and a QS075 connector.	10	0.85	200	59x39x29	17.00	3200	120x80x165	297.00
MD-013 Z+K LED *QS150 5907556003347			Yellow LED clearance lamp with an angle holder, a cable and a QS150 connector.	10	0.85	200	59x39x29	17.00	3200	120x80x165	297.00
MD-013 C+K LED 5907556003163			Red LED clearance lamp with a cable.	10	0.75	200	59x39x29	15.00	3200	120x80x165	265.00
MD-013 C+K LED *QS075 5907556004719			Red LED clearance lamp with an angle holder, a cable and a QS075 connector.	10	0.85	200	59x39x29	17.00	3200	120x80x165	297.00
MD-013 C+K LED *QS150 5907556003194			Red LED clearance lamp with an angle holder, a cable and a QS150 connector.	10	0.85	200	59x39x29	17.00	3200	120x80x165	297.00

Omega holder is not included in the basic accessories of the lamp.

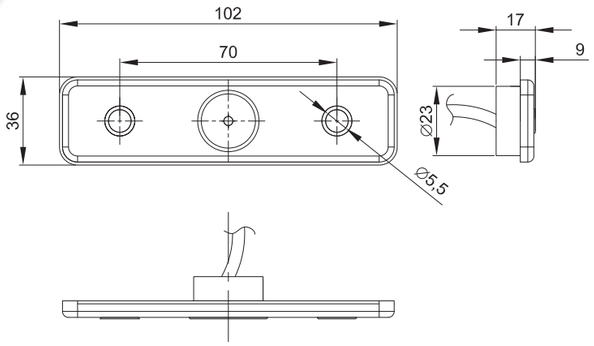

WWW

1-functional **LED** clearance lamp with a reflector
- european **E9** homologation
- ElectroMagnetic Compatibility – **EMC** certificate
- shock-resistance – **PC** lampshade
- optional polarity connection
- integrated 2x0.75 mm² cable

Lamp functions:
- clearance light

Technical specification:
- supply voltage: **12–36V DC**
- operating temperature: **–40°C** to **+55°C**
- lamp is resistant to any weather conditions
- lamp is fully airtight

Power consumption / Rated power:
- yellow or red clearance light: **12V=0.02A/0.25W/24V=0.02A/0.5W**
- white clearance light: **12V=0.04A/0.5W/24V=0.04A/1W**

EMC E 9

CAT SM LED

ID/EAN	Photo		Description	Unit pack		Multipack / carton			Multipack / pallet		
				qty.	kg	qty.	cm	kg	qty.	cm	kg
FT-004 B LED 5907556000476			White LED clearance lamp with a cable.	10	0.53	400	59x39x29	21.20	8000	120x80x165	449.00
FT-004 B LED *QS075 5907556003972			White LED clearance lamp with a cable and a QS075 connector.	10	0.58	400	59x39x29	23.20	8000	120x80x165	489.00
FT-004 B LED *QS150 5907556000506			White LED clearance lamp with a cable and a QS150 connector.	10	0.58	400	59x39x29	23.20	8000	120x80x165	489.00
FT-004 Z LED 5907556000773			Yellow LED clearance lamp with a cable.	10	0.53	400	59x39x29	21.20	8000	120x80x165	449.00
FT-004 Z LED *QS075 5907556004092			Yellow LED clearance lamp with a cable and a QS075 connector.	10	0.58	400	59x39x29	23.20	8000	120x80x165	489.00
FT-004 Z LED *QS150 5907556000803			Yellow LED clearance lamp with a cable and a QS150 connector.	10	0.58	400	59x39x29	23.20	8000	120x80x165	489.00
FT-004 C LED 5907556000629			Red LED clearance lamp with a cable.	10	0.53	400	59x39x29	21.20	8000	120x80x165	449.00
FT-004 C LED *QS075 5907556004030			Red LED clearance lamp with a cable and a QS075 connector.	10	0.58	400	59x39x29	23.20	8000	120x80x165	489.00
FT-004 C LED *QS150 5907556000650			Red LED clearance lamp with a cable and a QS150 connector.	10	0.58	400	59x39x29	23.20	8000	120x80x165	489.00
KAT FT-004 5907556007048			Angle handle for **FT-004** lamps.	10	0.20						

Omega holder is not included in the basic accessories of the lamp.

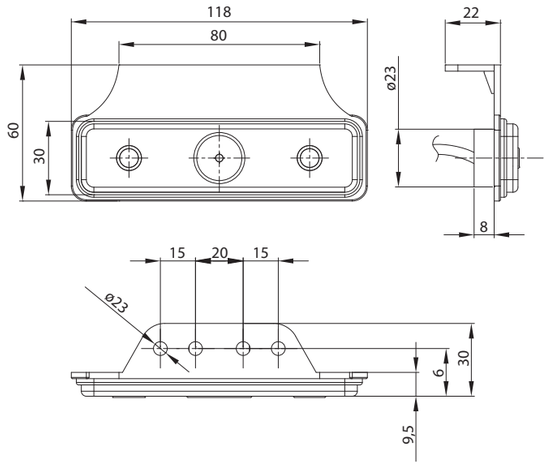

WWW

1-functional Clearance marker **LED** lamp with a reflector
- european **E9** homologation
- ElectroMagnetic Compatibility – **EMC** certificate
- ehock-resistance – **PC** lampshade
- optional polarity connection
- integrated 2x0.75 mm² cable

Lamp functions:
- clearance light

Technical specification:
- supply voltage: **12–36V DC**
- operating temperature: **–40°C** to **+55°C**
- lamp is resistant to any weather conditions
- lamp is fully airtight

Power consumption / Rated power:
- yellow or red clearance light: **12V=0.02A/0.25W/24V=0.02A/0.5W**
- white clearance light: **12V=0.04A/0.5W/24V=0.04A/1W**

EMC E 9

CAT SM LED

ID/EAN	Photo		Description	Unit pack		Multipack / carton			Multipack / pallet		
				qty.	kg	qty.	cm	kg	qty.	cm	kg
FT-004 B+K LED 5907556000544			White LED clearance lamp with an angle holder and a cable.	10	0,57	300	59x39x29	17,10	6000	120x80x165	367,00
FT-004 B+K LED *QS075 5907556004009			White LED clearance lamp with an angle holder, a cable and a QS075 connector.	10	0,62	300	59x39x29	18,60	6000	120x80x165	397,00
FT-004 B+K LED *QS150 5907556000575			White LED clearance lamp with an angle holder, a cable and a QS150 connector.	10	0,62	300	59x39x29	18,60	6000	120x80x165	397,00
FT-004 Z+K LED 5907556000841			Yellow LED clearance lamp with an angle holder and a cable.	10	0,57	300	59x39x29	17,10	6000	120x80x165	367,00
FT-004 Z+K LED *QS075 5907556004122			Yellow LED clearance lamp with an angle holder, a cable and a QS075 connector.	10	0,62	300	59x39x29	18,60	6000	120x80x165	397,00
FT-004 Z+K LED *QS150 5907556000872			Yellow LED clearance lamp with an angle holder, a cable and a QS150 connector.	10	0,62	300	59x39x29	18,60	6000	120x80x165	397,00
FT-004 C+K LED 5907556000698			Red LED clearance lamp with a cable.	10	0,57	300	59x39x29	17,10	6000	120x80x165	367,00
FT-004 C+K LED *QS075 5907556004061			Red LED clearance lamp with an angle holder, a cable and a QS075 connector.	10	0,62	300	59x39x29	18,60	6000	120x80x165	397,00
FT-004 C+K LED *QS150 5907556000728			Red LED clearance lamp with an angle holder, a cable and a QS150 connector.	10	0,62	300	59x39x29	18,60	6000	120x80x165	397,00

Omega holder is not included in the basic accessories of the lamp.

FT-009 C LED

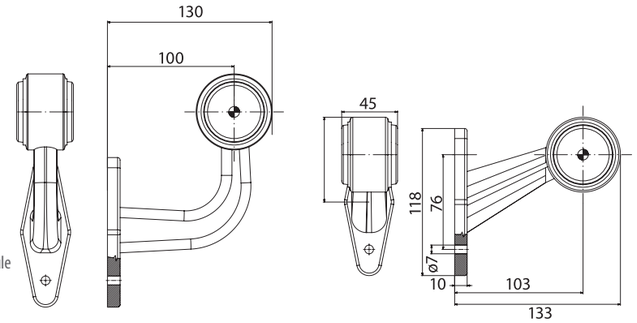

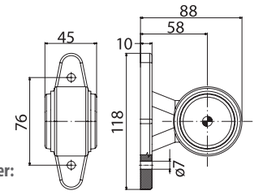

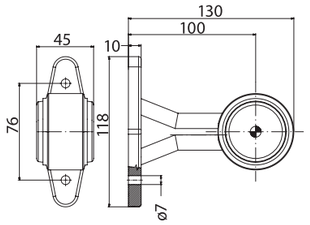

2-functional **LED** clearance lamp mounted with the rubber bracket and removable opitacal module
- european **E9** homologation
- ElectroMagnetic Compatibility – **EMC** certificate
- shock-resistance – **PC** lampshade
- optional polarity connection
- integrated 2x0.75 mm² cable

Lamp functions:
- white clearance light
- red clearance light

Technical specification:
- supply voltage: **12–36V DC**
- operating temperature: **–40°C** to **+55°C**
- lamp is resistant to any weather conditions
- lamp is fully airtight

Power consumption:
- 12V/24V = 0.04A/0.04A

Power consumption / Rated power:
- 12V/24V = 0.5W/1W

SM LED

ID/EAN	Photo		Description	Unit pack		Multipack / carton			Multipack / pallet		
				qty.	kg	qty.	cm	kg	qty.	cm	kg
FT-009 A LED 5907556006034			LED clearance marker lamp on a short straight rubber bracket with a cable.	2	0.25	200	59x39x29	25.00	4000	120x80x165	525.00
FT-009 A LED ***QS075** 5907556006096			LED clearance marker lamp on a short straight rubber bracket with a cable and a QS075 connector.	2	0.28	200	59x39x29	28.00	4000	120x80x165	585.00
FT-009 A LED ***QS150** 5907556006157			LED clearance marker lamp on a short straight rubber bracket with a cable and a QS150 connector.	2	0.28	200	59x39x29	28.00	4000	120x80x165	585.00
FT-009 B LED 5907556006041	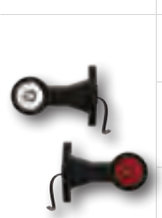		LED clearance marker lamp on a long straight rubber bracket with a cable.	2	0.35	160	59x39x29	28.00	3200	120x80x165	585.00
FT-009 B LED ***QS075** 5907556006102			LED clearance marker lamp on a long straight rubber bracket with a cable and a QS075 connector.	2	0.38	160	59x39x29	30.40	3200	120x80x165	633.00
FT-009 B LED ***QS150** 5907556006164			LED clearance marker lamp on a long straight rubber bracket with a cable and a QS150 connector.	2	0.38	160	59x39x29	30.40	3200	120x80x165	633.00
FT-009 C LED 5907556006058	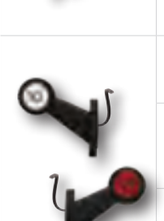		LED clearance marker lamp on a short slanting rubber bracket with a cable.	2	0.30	160	59x39x29	24.00	3200	120x80x165	505.00
FT-009 C LED ***QS075** 5907556006119			LED clearance marker lamp on a short slanting rubber bracket with a cable and a QS075 connector.	2	0.33	160	59x39x29	26.40	3200	120x80x165	553.00
FT-009 C LED ***QS150** 5907556006171			LED clearance marker lamp on a short slanting rubber bracket with a cable and a QS150 connector.	2	0.33	160	59x39x29	26.40	3200	120x80x165	553.00
FT-009 D LED 5907556006065	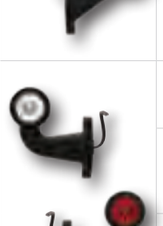		LED clearance marker lamp on a short L-shaped rubber bracket with a cable.	2	0.35	140	59x39x29	24.50	2800	120x80x165	515.00
FT-009 D LED ***QS075** 5907556006126			LED clearance marker lamp on a short L-shaped rubber bracket with a cable and a QS075 connector.	2	0.38	140	59x39x29	26.60	2800	120x80x165	557.00
FT-009 D LED ***QS150** 5907556006188			LED clearance marker lamp on a short L-shaped rubber bracket with a cable and a QS150 connector.	2	0.38	140	59x39x29	26.60	2800	120x80x165	557.00

Omega holder is not included in the basic accessories of the lamp.

WWW

FT-009 F LED

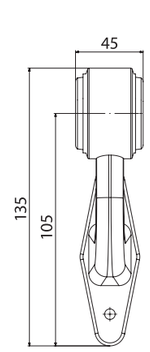

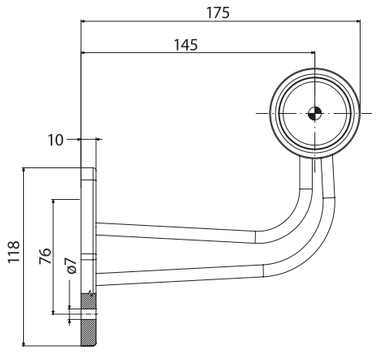

FT-009 E LED

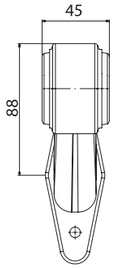

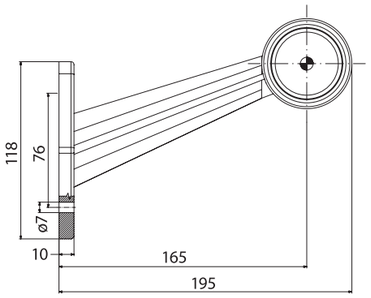

2-functional clearance **LED** clearance lamp mounted with the rubber bracket and removable opitacal module
- european **E9** homologation
- ElectroMagnetic Compatibility – **EMC** certificate
- shock-resistance – **PC** lampshade
- optional polarity connection
- integrated 2x0.75 mm² cable

Lamp functions:
- white clearance light
- red clearance light

Technical specification:
- supply voltage: **12–36V DC**
- operating temperature: **–40°C** to **+55°C**
- lamp is resistant to any weather conditions
- lamp is fully airtight

Power consumption:
- 12V/24V = 0.04A/0.04A

Power consumption / Rated power:
- 12V/24V = 0.5W/1W

SM LED

ID/EAN	Photo		Description	Unit pack		Multipack / carton			Multipack / pallet		
				qty.	kg	qty.	cm	kg	qty.	cm	kg
FT-009 E LED 5907556006072	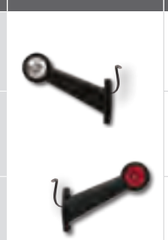		LED clearance marker lamp on a long slanting rubber bracket with a cable.	2	0.40	100	59x39x29	20.00	2000	120x80x165	425.00
FT-009 E LED ***QS075** 5907556006133			LED clearance marker lamp on a long slanting rubber bracket with a cable and a QS075 connector.	2	0.43	100	59x39x29	21.50	2000	120x80x165	455.00
FT-009 E LED ***QS150** 5907556006195			LED clearance marker lamp on a long slanting rubber bracket with a cable and a QS150 connector.	2	0.43	100	59x39x29	21.50	2000	120x80x165	455.00
FT-009 F LED 5907556006089	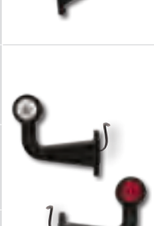		LED clearance marker lamp on a long L-shaped rubber bracket with a cable.	2	0.40	100	59x39x29	20.00	2000	120x80x165	425.00
FT-009 F LED ***QS075** 5907556006140			LED clearance marker lamp on a long L-shaped rubber bracket with a cable and a QS075 connector.	2	0.43	100	59x39x29	21.50	2000	120x80x165	455.00
FT-009 F LED ***QS150** 5907556006201			LED clearance marker lamp on a long L-shaped rubber bracket with a cable and a QS150 connector.	2	0.43	100	59x39x29	21.50	2000	120x80x165	455.00

Omega holder is not included in the basic accessories of the lamp.

EMC E 9

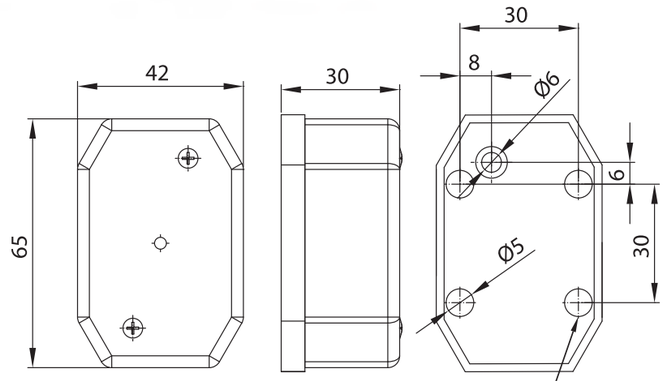

1-functional **LED** clearance lamp with a reflector
- european **E9** homologation
- ElectroMagnetic Compatibility – **EMC** certificate
- shock-resistance – **PC** lampshade
- optional polarity connection
- integrated 2x0.75 mm² cable

Lamp functions:
- clearance light

Technical specification:
- supply voltage: **12–36V DC**
- operating temperature: **–40°C** to **+55°C**
- lamp is resistant to any weather conditions
- lamp is fully airtight

Power consumption / Rated power:
- yellow or red clearance light: **12V=0.02A/0.25W/24V=0.02A/0.5W**
- white clearance light: **12V=0.04A/0.5W/24V=0.04A/1W**

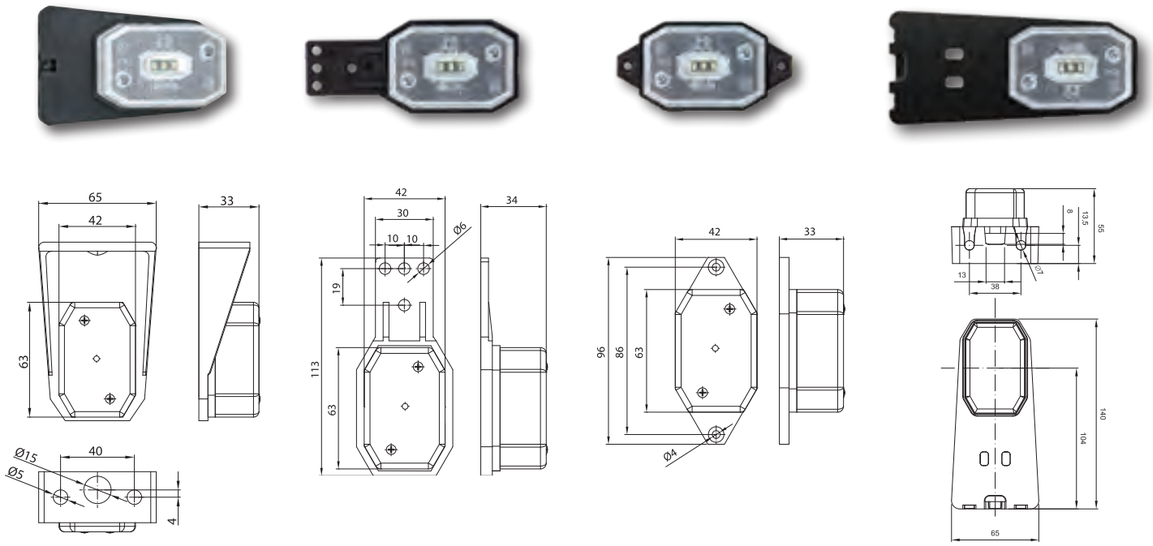

LEC CAT SM

ID/EAN	Photo		Description	Unit pack		Multipack / carton			Multipack / pallet		
				qty.	kg	qty.	cm	kg	qty.	cm	kg
FT-001 B LED 5907556005716			White LED clearance lamp with a reflector and a cable.	10	0.75	300	59x39x29	22.50	6000	120x80x165	475.00
FT-001 B I LED 5907556005747			White LED clearance lamp with a reflector, an angle holder and a cable.	10	0.95	150	59x39x29	14.25	3000	120x80x165	310.00
FT-001 B I LED ***QS075** 5907556005839			White LED clearance lamp with a reflector, an angle holder, a cable and a QS075 connector.	10	1.00	150	59x39x29	15.00	3000	120x80x165	325.00
FT-001 B II LED 5907556005778			White LED clearance lamp with a reflector, a flat holder and a cable.	10	0.80	300	59x39x29	24.00	6000	120x80x165	505.00
FT-001 B II LED ***QS075** 5907556005860			White LED clearance lamp with a reflector, a flat holder, a cable and a QS075 connector.	10	0.85	300	59x39x29	25.50	6000	120x80x165	535.00
FT-001 B III LED 5907556005808			White LED clearance lamp with a reflector, short holder and a cable.	10	0.80	300	59x39x29	24.00	6000	120x80x165	505.00
FT-001 B III LED ***QS075** 5907556005891			White LED clearance lamp with a reflector, a short holder, a cable and a QS075 connector.	10	0.85	300	59x39x29	25.50	6000	120x80x165	535.00
FT-001 B IV LED 5907556008809			White clearance LED lamp with a reflector, a flat with an angle holder and a 2x0.75 mm² cable.	10	1.10	120	59x39x29	13.20	2400	120x80x165	289.00
FT-001 B IV LED ***QS150** 5907556008823			White clearance LED lamp with a reflector, a flat with an angle holder, QS150 connector.	10	1.15	120	59x39x29	13.80	2400	120x80x165	301.00

Omega holder is not included in the basic accessories of the lamp.

EMC E 9

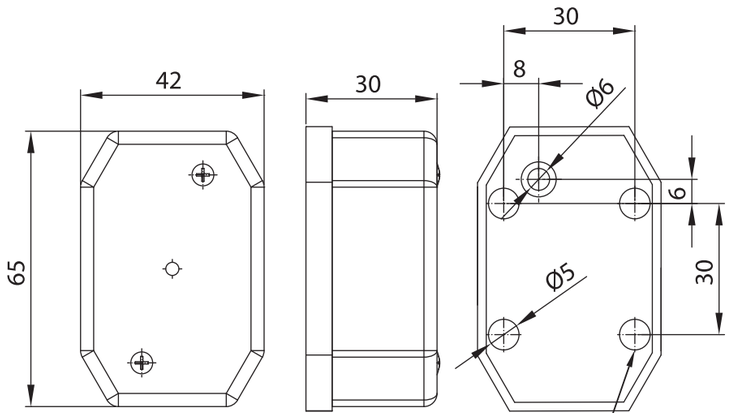

1-functional **LED** clearance lamp with a reflector
- european **E9** homologation
- ElectroMagnetic Compatibility – **EMC** certificate
- shock-resistance – **PC** lampshade
- optional polarity connection
- integrated 2x0.75 mm² cable

Lamp functions:
- clearance light

Technical specification:
- supply voltage: **12–36V DC**
- operating temperature: **–40°C** to **+55°C**
- lamp is resistant to any weather conditions
- lamp is fully airtight

Power consumption / Rated power:
- yellow or red clearance light: **12V=0.02A/0.25W/24V=0.02A/0.5W**
- white clearance light: **12V=0.04A/0.5W/24V=0.04A/1W**

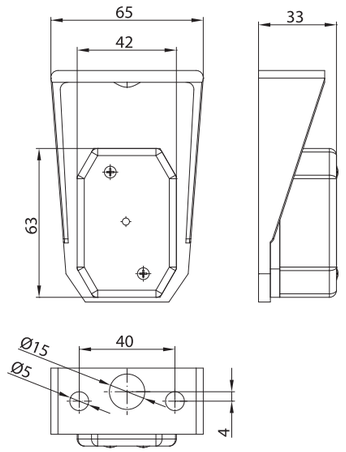

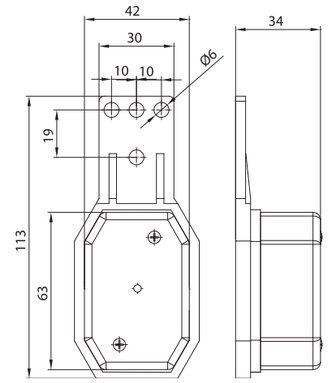

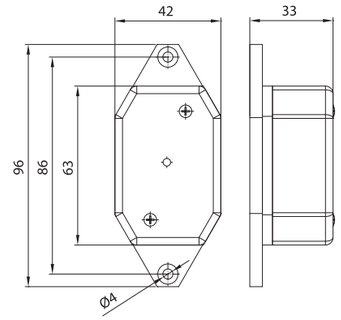

ID/EAN	Photo		Description	Unit pack		Multipack / carton			Multipack / pallet		
				qty.	kg	qty.	cm	kg	qty.	cm	kg
FT-001 Z LED 5907556005730			Yellow LED clearance lamp with a reflector and a cable.	10	0.75	300	59x39x29	22.50	6000	120x80x165	475.00
FT-001 Z I LED 5907556005761			Yellow LED clearance lamp with a reflector, an angle holder and a cable.	10	0.95	150	59x39x29	14.25	3000	120x80x165	310.00
FT-001 Z I LED ***QS075** 5907556005853			Yellow LED clearance lamp with a reflector, an angle holder, a cable and a QS075 connector.	10	1.00	150	59x39x29	15.00	3000	120x80x165	325.00
FT-001 Z II LED 5907556005792			Yellow LED clearance lamp with a reflector, a flat holder and a cable.	10	0.80	300	59x39x29	24.00	6000	120x80x165	505.00
FT-001 Z III LED 5907556005822			Yellow LED clearance lamp with a reflector, short holder and a cable.	10	0.80	300	59x39x29	24.00	6000	120x80x165	505.00

Omega holder is not included in the basic accessories of the lamp.

WWW

EMC E 9

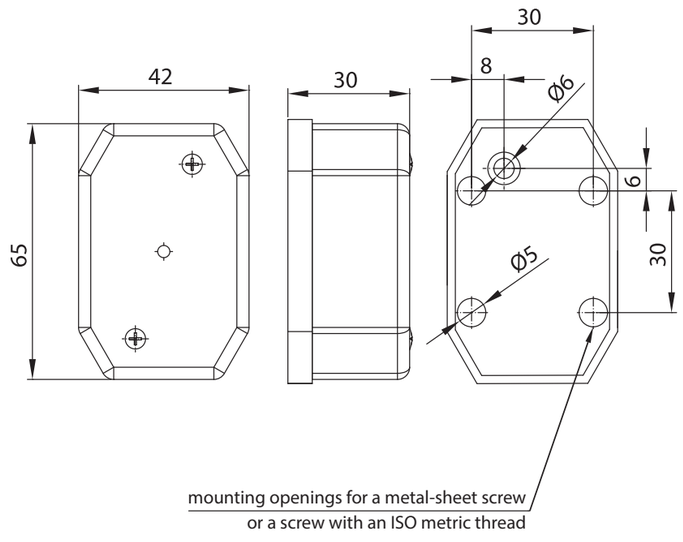

1-functional **LED** clearance lamp with a reflector
- european **E9** homologation
- ElectroMagnetic Compatibility – **EMC** certificate
- shock-resistance – **PC** lampshade
- optional polarity connection
- integrated 2x0.75 mm² cable

Lamp functions:
- clearance light

Technical specification:
- supply voltage: **12–36V DC**
- operating temperature: **–40°C** to **+55°C**
- lamp is resistant to any weather conditions
- lamp is fully airtight

Power consumption / Rated power:
- yellow or red clearance light: **12V=0.02A/0.25W/24V=0.02A/0.5W**
- white clearance light: **12V=0.04A/0.5W/24V=0.04A/1W**

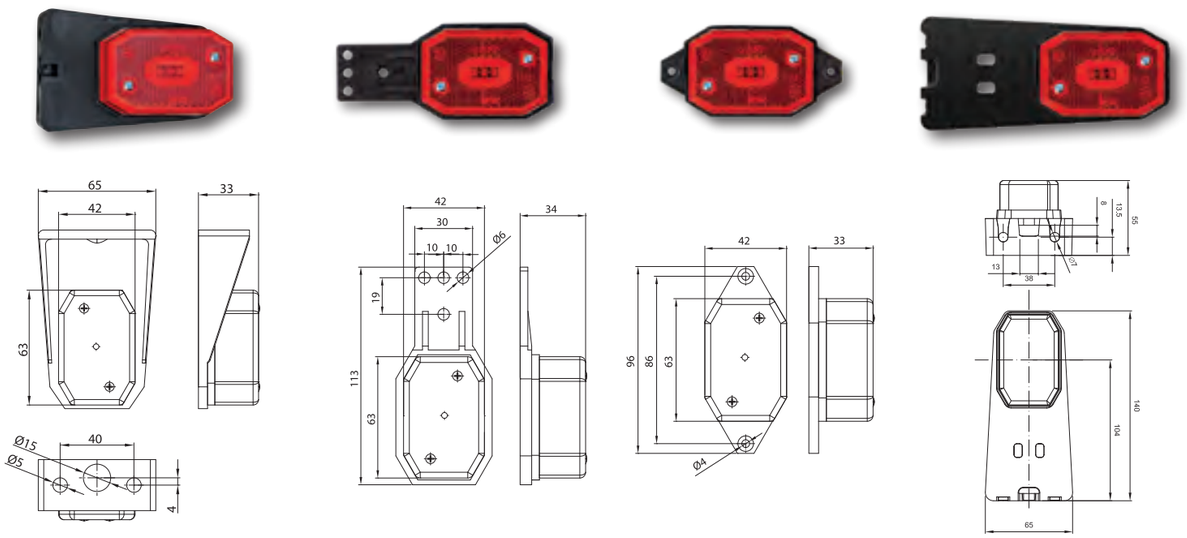

LEC CAT SM

ID/EAN	Photo		Description	Unit pack		Multipack / carton			Multipack / pallet		
				qty.	kg	qty.	cm	kg	qty.	cm	kg
FT-001 C LED 5907556005723			Red LED clearance lamp with a reflector and a cable.	10	0.75	300	59x39x29	22.50	6000	120x80x165	475.00
FT-001 C I LED 5907556005754			Red LED clearance lamp with a reflector, an angle holder and a cable.	10	0.95	150	59x39x29	14.25	3000	120x80x165	310.00
FT-001 C I LED ***QS075** 5907556005846			Red LED clearance lamp with a reflector, an angle holder, a cable and a QS075 connector.	10	1.00	150	59x39x29	15.00	3000	120x80x165	325.00
FT-001 C II LED 5907556005785			Red LED clearance lamp with a reflector, a flat holder and a cable.	10	0.80	300	59x39x29	24.00	6000	120x80x165	505.00
FT-001 C II LED ***QS075** 5907556005877			Red LED clearance lamp with a reflector, a flat holder, a cable and a QS075 connector.	10	0.85	300	59x39x29	25.50	6000	120x80x165	535.00
FT-001 C III LED 5907556005815			Red LED clearance lamp with a reflector, short holder and a cable.	10	0.80	300	59x39x29	24.00	6000	120x80x165	505.00
FT-001 C III LED ***QS075** 5907556005907			Red LED clearance lamp with a reflector, a short holder, a cable and a QS075 connector.	10	0.85	300	59x39x29	25.50	6000	120x80x165	535.00
FT-001 C IV LED ***QS075** 5907556008878			Red clearance LED lamp with a reflector, a flat with an angle holder, QS075 connector.	10	1.15	120	59x39x29	13.80	2400	120x80x165	301.00
FT-001 C IV LED ***QS150** 5907556008885			Red clearance LED lamp with a reflector, a flat with an angle holder, QS150 connector.	10	1.15	120	59x39x29	13.80	2400	120x80x165	301.00

Omega holder is not included in the basic accessories of the lamp.

LED clearance 1-functional

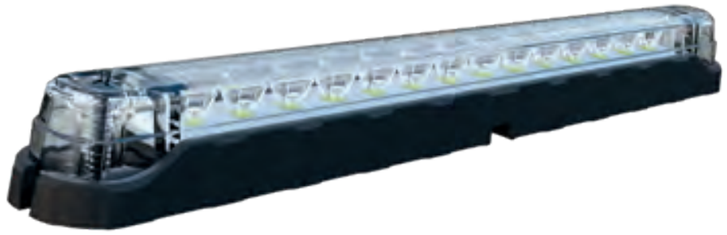

VIDEO

WWW

EMC

E 9

1-functional **LED** clearance lamp
- european **E9** homologation
- ElectroMagnetic Compatibility – **EMC** certificate
- shock-resistance – **PC** lampshade
- optional polarity connection

Lamp functions:
- clearance light

Technical specification:
- supply voltage: **12–36V DC**
- operating temperature: **–40°C** to **+55°C**
- lamp is resistant to any weather conditions
- lamp is fully airtight

Power consumption:
- clearance light: **12V/24V = 0.2A/0.2A**

Power consumption (rated power):
- clearance light: **12V/24V = 2.5W/5.0W**

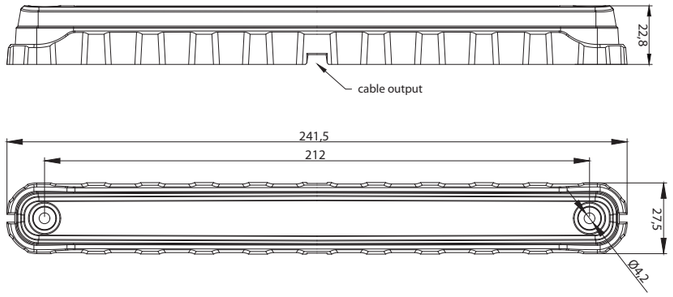

SM LED

ID/EAN	Photo		Description	Unit pack		Multipack / carton			Multipack / pallet		
				qty.	kg	qty.	cm	kg	qty.	cm	kg
FT-092 B LED 5907556017825			Clearance Lamp LED 12-36V, white, cable 0,15m.	1			59x39x29			120x80x165	
FT-092 Z LED 5907556017849			Clearance Lamp LED 12-36V, yellow, cable 0,15m.	1			59x39x29			120x80x165	
FT-092 C LED 5907556017832			Clearance Lamp LED 12-36V, red, cable 0,15m.	1			59x39x29			120x80x165	

Omega holder is not included in the basic accessories of the lamp.

WWW

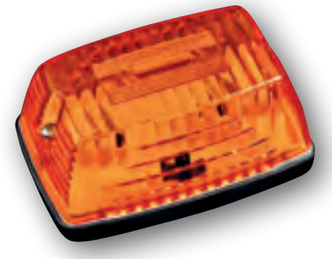

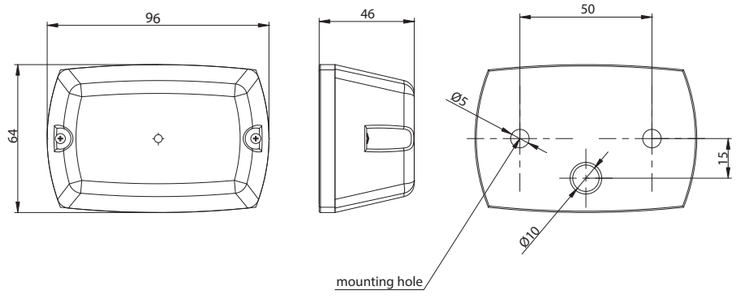

SM

ID/EAN	Photo	Description	Unit pack		Multipack / carton			Multipack / pallet		
			qty.	kg	qty.	cm	kg	qty.	cm	kg
FT-006 B 5907556001091		White clearance lamp.	10	0.71	200	59x39x29	14.20	4000	120x80x165	309.00
FT-006 Z 5907556001138		Yellow clearance lamp.	10	0.71	200	59x39x29	14.20	4000	120x80x165	309.00
FT-006 C 5907556001114		Red clearance lamp.	10	0.71	200	59x39x29	14.20	4000	120x80x165	309.00
FT-006 K B/Z/C 5907556001107 5907556001145 5907556001121		Lampshade **FT-006** B / Z / C.	10							

WWW

E 9

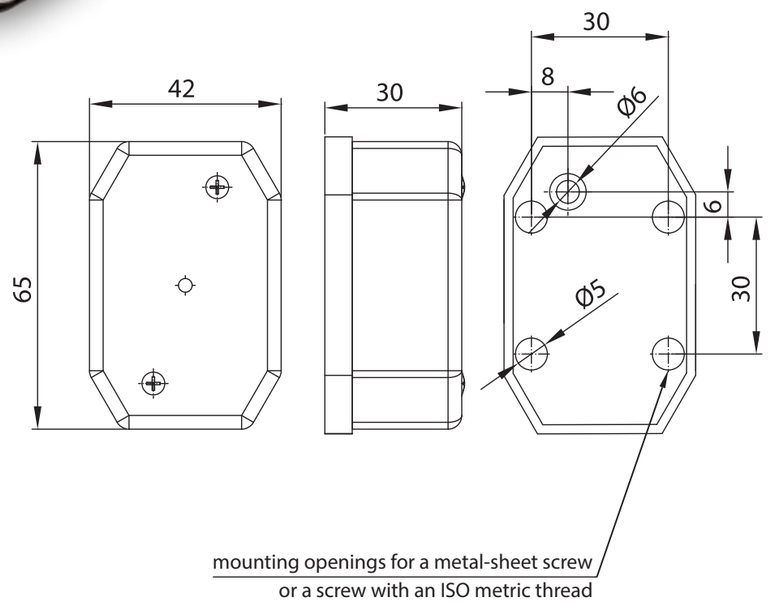

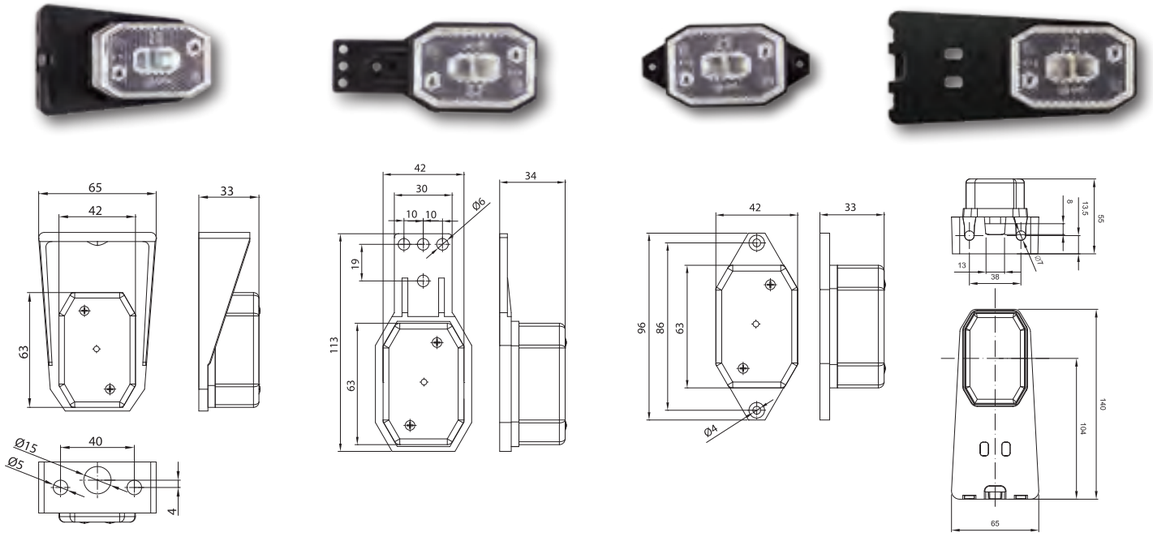

CAT SM

ID/EAN	Photo	Description	Unit pack		Multipack / carton			Multipack / pallet		
			qty.	kg	qty.	cm	kg	qty.	cm	kg
FT-001 B 5907556000155		White clearance lamp with a reflector.	10	0.43	300	59x39x29	12.90	6000	120x80x165	283.00
FT-001 Z 5907556000254		Yellow clearance lamp with a reflector.	10	0.43	300	59x39x29	12.90	6000	120x80x165	283.00
FT-001 C 5907556000209		Red clearance lamp with a reflector.	10	0.43	300	59x39x29	12.90	6000	120x80x165	283.00
FT-001 B I 5907556000162		White clearance lamp with an angle holder and a reflector.	10	0.72	200	59x39x29	14.40	4000	120x80x165	313.00
FT-001 Z I 5907556000261		Yellow clearance lamp with an angle holder and a reflector.	10	0.72	200	59x39x29	14.40	4000	120x80x165	313.00
FT-001 C I 5907556000216		Red clearance lamp with an angle holder and a reflector.	10	0.72	200	59x39x29	14.40	4000	120x80x165	313.00
FT-001 B II 5907556000179		White clearance lamp with a flat holder and a reflector.	10	0.58	360	59x39x29	20.88	7200	120x80x165	442.60
FT-001 Z II 5907556000278		Yellow clearance lamp with a flat holder and a reflector.	10	0.58	360	59x39x29	20.88	7200	120x80x165	442.60
FT-001 C II 5907556000223		Red clearance lamp with a flat holder and a reflector.	10	0.58	360	59x39x29	20.88	7200	120x80x165	442.60
FT-001 B III 5907556000186		White clearance lamp with a short holder and a reflector.	10	0.51	360	59x39x29	18.36	7200	120x80x165	392.20
FT-001 Z III 5907556000285		Yellow clearance lamp with a short holder and a reflector.	10	0.51	360	59x39x29	18.36	7200	120x80x165	392.20
FT-001 C III 5907556000230		Red clearance lamp with a short holder and a reflector.	10	0.51	360	59x39x29	18.36	7200	120x80x165	392.20
FT-001 B IV 5907556008892		White clearance LED lamp with a reflector and a flat with an angle holder.	10	0.80	160	59x39x29	12.80	3200	120x80x165	281.00
FT-001 K B/Z/C 5907556000193 5907556000292 5907556000247		Lampshade **FT-001** B/Z/C.	10							

REVERSING *Lamps*

The purpose of these products
is to **signal** to other road users
the **driver's intention to revers**e.
The lamp turns on automatically
when we **use reverse gear**.

WWW

VIDEO

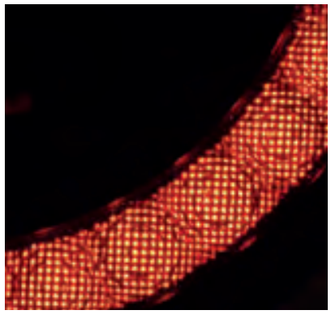

EMC E 9

3-functional **LED** lamp – low power consumption
European **E9** homologation
ElectroMagnetic Compatibility – **EMC** certificate
Shock-resistance – **PC** lampshade
Reverse polarity protection system
The lamp depth is only **35 mm**
Crystal-like position light

In the lamp it has been used an **innovative** position light that **imitates microcrystals**. This solution creates the illusion of **living light**, even while looking at the lamp from different angles.

Lamp functions:
- rear running light
- reversing light
- fog light

Technical specification:
- supply voltage: **12–36V DC**
- operating temperature: **–40°C** to **+55°C**
- lamp is resistant to any weather conditions
- lamp is fully airtight
- cable out **1 m**

Power consumption:
- rear running light: **12V/24V = 0.05A/0.05A**
- reversing light: **12V/24V = 0.2A/0.12A**
- fog light: **12V/24V = 0.25A/0.15A**

Power consumption / Rated power:
- rear running light: **12V/24V = 0.6W/1.2W**
- reversing light: **12V/24V = 2.4W/3W**
- fog light **12V/24V = 3W/3.6W**

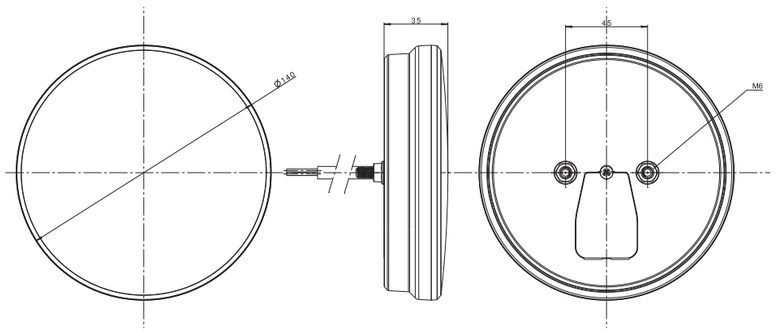

ID/EAN	Photo	Description	Unit pack		Multipack / carton			Multipack / pallet		
			qty.	kg	qty.	cm	kg	qty.	cm	kg
FT-214 LED 5907556015531		Universal LED 3 functional lamp POSITON/ FOG/ REVERSING, 12 / 24V, round with 1.0 m wiring loom.	1	0.386	50	59x39x29	20	1000	120x80x165	425.00

WWW

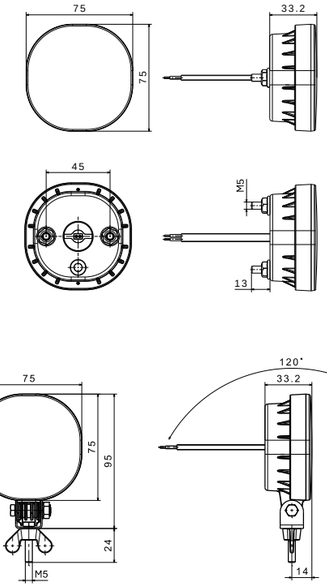

EMC E 9

1-functional **LED** lamp – low power onsumption
european **E9** homologation
ElectroMagnetic Compatibility – **EMC certificate, R10**
shock-resistance – **PC** lampshade
optional polarity connection

Lamp functions:
- reversing ligh

Technical specification:
- Universal supply voltage: **12–36V DC**
- Operating temperature: **–40°C** to **+55°C**
- light flux: **200 lm**
- Lamp is resistant to any weather conditions
- Lamp is fully airthight

Power consumption:
- reversing ligh: **12V/24V = 0.25A/0.125A**

Power consumption (rated power):
- reversing ligh: **12V/24V = 3W/3W**

ID/EAN	Photo	Description	Unit pack		Multipack / carton			Multipack / pallet		
			qty.	kg	qty.	cm	kg	qty.	cm	kg
FT-410 LED 5907556013858		LED reversing lamp with a 0.5 m cable.	1	0.140	112	59x39x29	15.68	2240	120x80x165	338.60
FT-410 LED P 5907556014107		LED P reversing lamp with a 0.5 m cable and a stud mount.	1	0.150	112	59x39x29	16.80	2240	120x80x165	361.00
FT-410 LED SS 5907556013865		LED reversing lamp with a 0.5 m cable ended Super Seal conntector.	1	0.150	112	59x39x29	16.80	2240	120x80x165	361.00
FT-410 LED SS P 5907556014114		LED P reversing lamp with a 0.5 m cable ended Super Seal conntector and a stud mount.	1	0.160	112	59x39x29	17.92	2240	120x80x165	383.40

LED reversing lamp

WWW

1-functional universal **LED** reversing lamp – low power consumption
- european **E9** homologation
- ElectroMagnetic Compatibility – **EMC** certificate
- shock-resistance – **PC** lampshade
- optional polarity connection
- integrated 2x0.75 mm² cable

Lamp functions:
- reversing light

Technical specification:
- supply voltage: **12–36V DC**
- operating temperature: **–40°C** to **+55°C**
- lamp is resistant to any weather conditions
- lamp is fully airtight

Power consumption:
- reversing light: **12V/24V ⎓ 0.28A/0.14A**

Power consumption / Rated power:
- reversing light: **12V/24V ⎓ 3.5W/3.5W**

EMC E 9

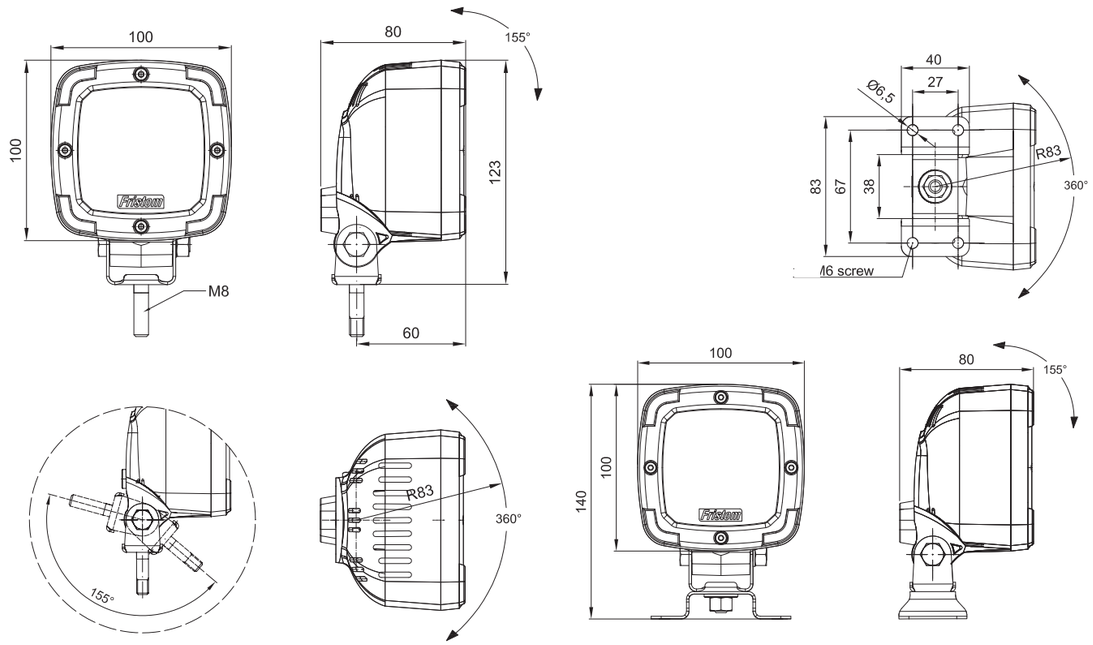

ID/EAN	Photo	Description	Unit pack		Multipack / carton			Multipack / pallet		
			qty.	kg	qty.	cm	kg	qty.	cm	kg
FT-036 REV LED 5907556006317		Universal LED reversing lamp with a joint handle (black housing).	1	0.55	50	59x39x29	27.50	1000	120x80x165	575.00
Uchwyt „OMEGA" 5907556006010		«OMEGA» mounting holder of galvanized metal sheet (FT-036 lamps).	10	0.60						

WWW

EMC E 9

2-functional universal **LED** reversing lamp – low power consumption
- european **E9** homologation
- ElectroMagnetic Compatibility – **EMC** certificate
- shock-resistance – **PC** lampshade
- reverse polarity protection system

Lamp functions:
- rear running light
- reversing light

Technical specification:
- supply voltage: **12–36V DC**
- operating temperature: **–40°C** to **+55°C**
- lamp is resistant to any weather conditions
- lamp is fully airtight

Power consumption:
- running light: **12V/24V ⎓ 0.1A/0.1A**
- reversing light: **12V/24V ⎓ 0.2A/0.2A**

Power consumption / Rated power:
- running light: **12V/24V ⎓ 1.2W/2.4W**
- reversing light: **12V/24V ⎓ 2.5W/5W**

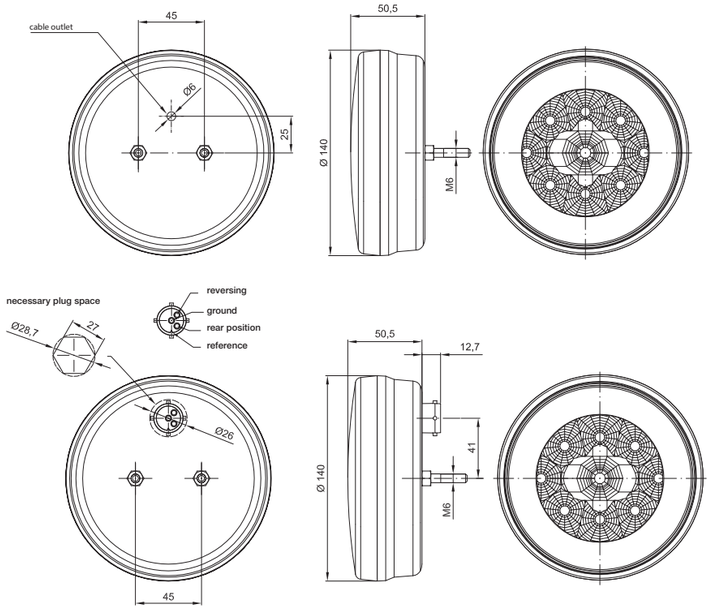

ID/EAN	Photo	Description	Unit pack		Multipack / carton			Multipack / pallet		
			qty.	kg	qty.	cm	kg	qty.	cm	kg
FT-112 LED 5907556007864		Universal LED reversing lamp 12 / 24V, round with position light and 1.0 m wiring loom.	1	0.50	40	59x39x29	20.00	800	120x80x165	425.00
FT-112 LED BAJONET 5907556007871		Universal LED reversing lamp 12 / 24V, round with position light and 5 PIN bayonet connector.	1	0.40	40	59x39x29	16.00	800	120x80x165	345.00

LED reversing lamp

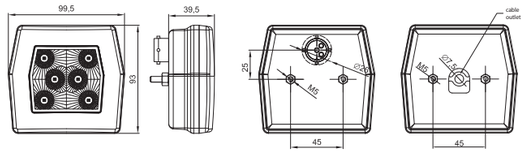

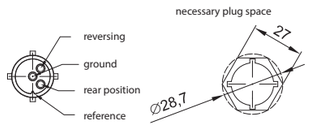

WWW

EMC E 9

2-functional Universal **LED** reversing lamp – low power consumption
- european **E9** homologation
- ElectroMagnetic Compatibility – **EMC** certificate
- shock-resistance – **PC** lampshade
- reverse polarity protection system

Lamp functions:
- rear running light
- reversing light

Technical specification:
- supply voltage: **12–36V DC**
- operating temperature: **–40°C** to **+55°C**
- lamp is resistant to any weather conditions
- lamp is fully airtight

Power consumption:
- running light: **12V/24V = 0.06A/0.06A**
- reversing light: **12V/24V = 0.2A/0.1A**

Power consumption / Rated power:
- running light: **12V/24V = 0.75W/1.5W**
- reversing light: **12V/24V = 2.5W/2.5W**

ID/EAN	Photo	Description	Unit pack		Multipack / carton			Multipack / pallet		
			qty.	kg	qty.	cm	kg	qty.	cm	kg
FT-124 LED 5907556008960		Universal LED 2-functional rear reversing lamp 12/ 24V, round with a 1 m wiring loom.	1	0.26	108	59x39x29	28.08	2160	120x80x165	586.60
FT-124 LED BAJONET 5907556008977		Universal LED 2-functional rear reversing lamp 12/ 24V, round with 5 PIN bayonet connector.	1	0.21	108	59x39x29	22.68	2160	120x80x165	478.60

LED reversing lamp

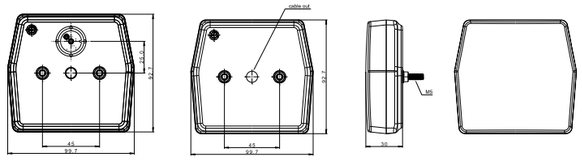

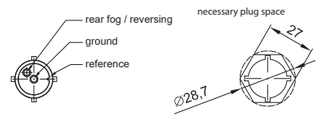

WWW

VIDEO

EMC E 9

Universal **LED** reversing lamp – low power consumption
- european **E9** homologation
- ElectroMagnetic Compatibility – **EMC** certificate
- shock-resistance – **PC** lampshade
- reverse polarity protection system

Lamp functions:
- reversing light

Technical specification:
- supply voltage: **12–15V DC**
- operating temperature: **–40°C** to **+55°C**
- lamp is resistant to any weather conditions
- lamp is fully airtight

Power consumption:
- reversing light: **12V = 0.2A**

Power consumption / Rated power:
- reversing light: **12V = 2.4W**

ID/EAN	Photo	Description	Unit pack		Multipack / carton			Multipack / pallet		
			qty.	kg	qty.	cm	kg	qty.	cm	kg
FT-224 LED 907556015241		Universal LED 1-functional rear reversing lamp 12V, round with a 1 m wiring loom.	1	0.214	108	59x39x29	23.112	2160	120x80x165	487.24
FT-224 LED BAJONET 5907556015258		Universal LED 1-functional rear reversing lamp 12V, round with 5 PIN bayonet connector.	1	0.189	108	59x39x29	20.412	2160	120x80x165	433.24

WWW

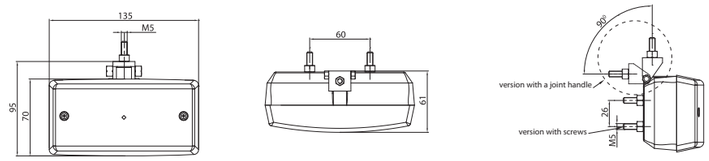

ID/EAN	Photo	Description	Unit pack		Multipack / carton			Multipack / pallet		
			qty.	kg	qty.	cm	kg	qty.	cm	kg
DOB-051 P BP		Reversing lamp mounted with a joint (without cable).	1	0.18	80	59x39x29	14.40	1600	120x80x165	313.00
DOB-051 P ZP		Reversing lamp mounted with a joint (with a cable).	1	0.18	80	59x39x29	14.40	1600	120x80x165	313.00
DOB-051 S BP		Reversing lamp mounted with 2 M5 screws (without cable).	1	0.16	80	59x39x29	12.80	1200	120x80x165	217.00
DOB-051 S ZP		Reversing lamp mounted with 2 M5 screws (with a cable).	1	0.16	80	59x39x29	12.80	1200	120x80x165	217.00
DOB-051 K		Lampshade **DOB-051**.	5							

Reversing lamp MD-040

WWW

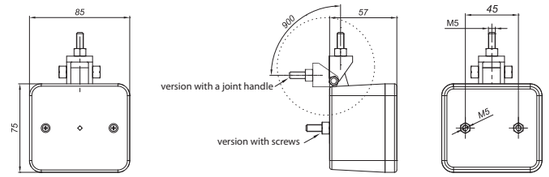

ID/EAN	Photo	Description	Unit pack		Multipack / carton			Multipack / pallet		
			qty.	kg	qty.	cm	kg	qty.	cm	kg
MD-040 S		Reversing lamp mounted with 2 M5 screws.	1	0.11	150	59x39x29	16.50	3000	120x80x165	355.00
MD-040 P		Reversing lamp mounted with a joint handle.	1	0.13	150	59x39x29	19.50	3000	120x80x165	415.00
MD-040 K		Lampshade **MD-040**.	5							

FOG Lamps

Fog lamps ensure adequate **visibility in unfavourable weather** conditions. They are used only in conditions **of insufficient air transparency**

WWW

VIDEO

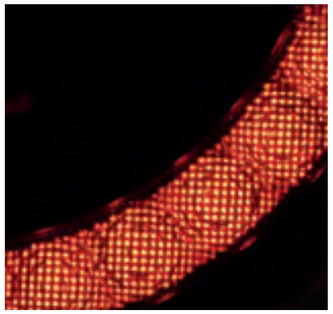

EMC E 9

3-functional **LED** lamp – low power consumption
European **E9** homologation
ElectroMagnetic Compatibility – **EMC** certificate
Shock-resistance – **PC** lampshade
Reverse polarity protection system
The lamp depth is only **35 mm**
Crystal-like position light

In the lamp it has been used an **innovative** position light that **imitates microcrystals**. This solution creates the illusion of **living light**, even while looking at the lamp from different angles.

Lamp functions:
- rear running light
- reversing light
- fog light

Technical specification:
- supply voltage: **12–36V DC**
- operating temperature: **–40°C** to **+55°C**
- lamp is resistant to any weather conditions
- lamp is fully airtight
- cable out **1 m**

Power consumption:
- rear running light: **12V/24V = 0.05A/0.05A**
- reversing light: **12V/24V = 0.2A/0.12A**
- fog light: **12V/24V = 0.25A/0.15A**

Power consumption / Rated power:
- rear running light: **12V/24V = 0.6W/1.2W**
- reversing light: **12V/24V = 2.4W/3W**
- fog light **12V/24V = 3W/3.6W**

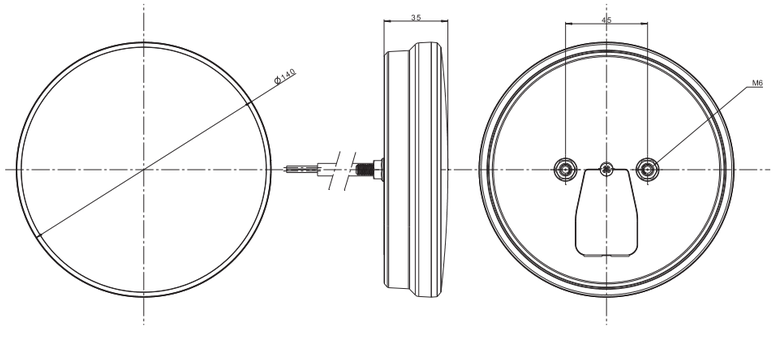

ID/EAN	Photo	Description	Unit pack		Multipack / carton			Multipack / pallet		
			qty.	kg	qty.	cm	kg	qty.	cm	kg
FT-214 LED 5907556015531		Universal LED 3 functional lamp POSITON/ FOR/ REVERSING, 12 / 24V, round with 1.0 m wiring loom.	1	0.386	50	59x39x29	20	1000	120x80x165	425.00

WWW

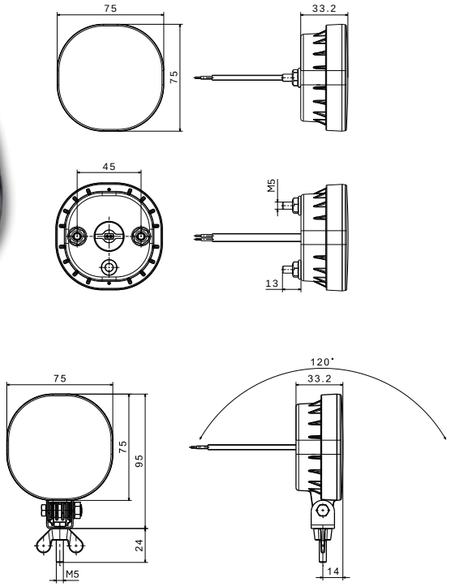

EMC E 9

1-functional **LED** lamp – low power consumption
european **E9** homologation
ElectroMagnetic Compatibility – E**MC certificate, R10**
shock-resistance – **PC** lampshade
optional polarity connection

Lamp functions:
- fog light

Technical specification:
- Universal supply voltage: **12–36V DC**
- Operating temperature: **–40°C** do **+55°C**
- Lamp is resistant to any weather conditions
- Lamp is fully airthight

Power consumption:
- fog light: **12V/24V = 0.25A/0.125A**

Power consumption (rated power):
- fog light: **12V/24V = 3W/3W**

ID/EAN	Photo	Description	Unit pack		Multipack / carton			Multipack / pallet		
			qty.	kg	qty.	cm	kg	qty.	cm	kg
FT-400 LED 5907556013834		LED fog lamp with a 0.5 m cable.	1	0.140	112	59x39x29	15.68	2240	120x80x165	338.60
FT-400 LED P 5907556014084		LED P fog lamp with a 0.5 m cable.	1	0.150	112	59x39x29	16.80	2240	120x80x165	361.00
FT-400 LED SS 5907556013841		LED fog lamp with a 0.5 m cable ended Super Seal conntector.	1	0.150	112	59x39x29	16.80	2240	120x80x165	361.00
FT-400 LED SS P 5907556014091		LED P fog lamp with a 0.5 m cable ended Super Seal conntector.	1	0.160	112	59x39x29	17.92	2240	120x80x165	383.40

LED fog lamp

WWW

EMC E 9

2-functional universal **LED** fog lamp – low power consumption
- european **E9** homologation
- ElectroMagnetic Compatibility – **EMC** certificate
- shock-resistance – **PC** lampshade
- reverse polarity protection system

Lamp functions:
- rear running light
- fog light

Technical specification:
- supply voltage: **12–36V DC**
- operating temperature: **–40°C** to **+55°C**
- lamp is resistant to any weather conditions
- lamp is fully airtight

Power consumption:
- running light: **12V/24V = 0.1A/0.1A**
- fog light: **12V/24V = 0.25A/0.25A**

Power consumption / Rated power:
- running light: **12V/24V = 1.2W/2.4W**
- fog light: **12V/24V = 3W/6W**

LED

ID/EAN	Photo	Description	Unit pack		Multipack / carton			Multipack / pallet		
			qty.	kg	qty.	cm	kg	qty.	cm	kg
FT-111 LED 5907556007840		Universal LED fog lamp 12 / 24V, round with position light and 1.0 m wiring loom.	1	0.50	40	59x39x29	20.00	800	120x80x165	425.00
FT-111 LED BAJONET 5907556007857		Universal LED fog lamp 12 / 24V, round with position light and 5 PIN bayonet connector.	1	0.40	40	59x39x29	16.00	800	120x80x165	345.00

WWW

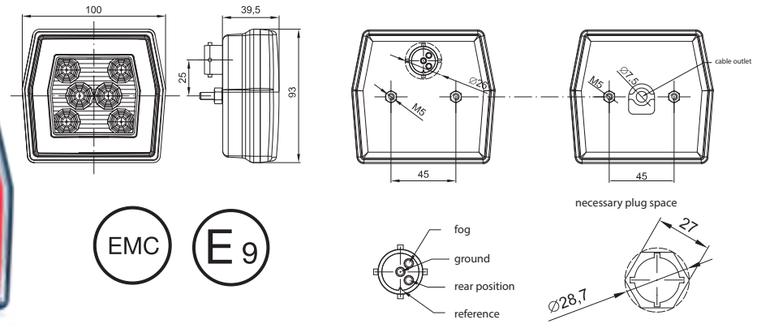

EMC E 9

2-functional universal **LED** fog lamp – low power consumption
- european **E9** homologation
- ElectroMagnetic Compatibility – **EMC** certificate
- shock-resistance – **PC** lampshade
- reverse polarity protection system

Lamp functions:
- reverse running light
- fog light

Technical specification:
- supply voltage: **12–36V DC**
- operating temperature: **–40°C** to **+55°C**
- lamp is resistant to any weather conditions
- lamp is fully airtight

Power consumption:
- running light: **12V/24V = 0.06A/0.06A**
- fog light: **12V/24V = 0.16A/0.08A**

Power consumption / Rated power:
- running light: **12V/24V = 0.75W/1.5W**
- fog light: **12V/24V = 2W/2W**

LED

ID/EAN	Photo	Description	Unit pack		Multipack / carton			Multipack / pallet		
			qty.	kg	qty.	cm	kg	qty.	cm	kg
FT-123 LED 5907556008304		Universal LED 2-functional rear fog lamp 12/ 24V with 1 m wiring loom.	1	0.26	108	59x39x29	28.08	2160	120x80x165	586.60
FT-123 LED BAJONET 5907556008311		Universal LED 2-functional rear fog lamp 12/ 24V, with a 5 PIN bayonet connector.	1	0.21	108	59x39x29	22.68	2160	120x80x165	478.60

LED fog lamp FT-223 LED

WWW VIDEO

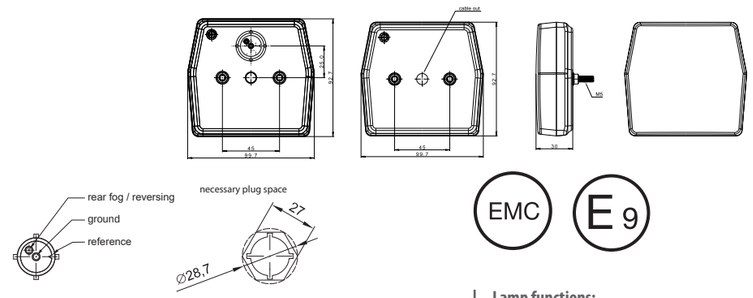

EMC E 9

Universal **LED** fog lamp – low power consumption
- european **E9** homologation
- ElectroMagnetic Compatibility – **EMC** certificate
- shock-resistance – **PC** lampshade
- reverse polarity protection system

Lamp functions:
- fog light

Technical specification:
- supply voltage: **12-15V DC**
- operating temperature: **–40°C** to **+55°C**
- lamp is resistant to any weather conditions
- lamp is fully airtight

Power consumption:
- fog light: **12V = 0.2A**

Power consumption / Rated power:
- fog light: **12V = 2.4W**

LED

ID/EAN	Photo	Description	Unit pack		Multipack / carton			Multipack / pallet		
			qty.	kg	qty.	cm	kg	qty.	cm	kg
FT-223 LED 5907556015227		LED Universal LED 1-functional rear fog lamp 12V with 1 m wiring loom.	1	0.210	108	59x39x29	22.68	2160	120x80x165	478.60
FT-223 LED BAJONET 5907556015234		Universal LED 1-functional rear fog lamp 12V, with a 5 PIN bayonet connector.	1	0.190	108	59x39x29	20.52	2160	120x80x165	435.40

WWW

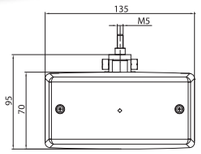

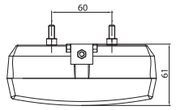

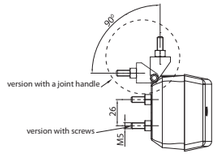

ID	Photo	Description	Unit pack		Multipack / carton			Multipack / pallet		
			qty.	kg	qty.	cm	kg	qty.	cm	kg
DOB-050 P BP		Fog lamp mounted with a joint (without a cable).	1	0.18	80	59x39x29	14.40	1600	120x80x165	313.00
DOB-050 P ZP		Fog lamp mounted with a joint (with a cable).	1	0.18	80	59x39x29	14.40	1600	120x80x165	313.00
DOB-050 S BP		Fog lamp mounted with 2 M5 screws (without a cable).	1	0.16	80	59x39x29	12.80	1200	120x80x165	217.00
DOB-050 S ZP		Fog lamp mounted with 2 M5 screws (with a cable).	1	0.16	80	59x39x29	12.80	1200	120x80x165	217.00
DOB-050 K		Lampshade **DOB-050**.	5							

WWW

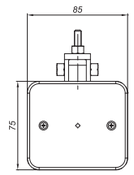

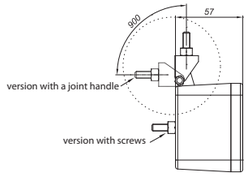

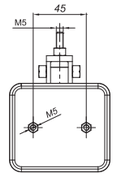

ID	Photo	Description	Unit pack		Multipack / carton			Multipack / pallet		
			qty.	kg	qty.	cm	kg	qty.	cm	kg
MD-035 S		Fog lamp mounted with 2 M5 screws.	1	0.11	150	59x39x29	16.50	3000	120x80x165	355.00
MD-035 P		Fog lamp mounted with a joint.	1	0.11	150	59x39x29	16.50	3000	120x80x165	355.00
MD-035 K		Lampshade **MD-035**.	5							

Number PLATE LIGHT

License plate lamps are an **absolutely indispensable type of lighting on every vehicle, trailer and machine approved for road traffic**. Modern lighting, developed in LED technology, **clearly exposes license plate numbers at night and in unfavourable weather conditions**.

Number plate LED lamp

1-functional number plate **LED** lamp – low power consumption
european **E9** homologation
ElectroMagnetic Compatibility – **EMC** certificate
shock-resistance – **PC** lampshade
optional polarity connection

Lamp functions:
- license number plate light

Technical specification:
- supply voltage: **12–36V DC**
- operating temperature: **–40°C** to **+55°C**
- lamp is resistant to any weather conditions
- lamp is fully airtight

Power consumption:
- license plate light: **12V/24V = 0.06A/0.06A**

Power consumption / Rated power:
- license plate light: **12V/24V = 0.8W/1.5W**

WWW

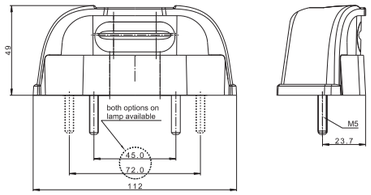

LT LEC

ID/EAN	Photo		Description	Unit pack		Multipack / carton			Multipack / pallet		
				qty.	kg	qty.	cm	kg	qty.	cm	kg
FT-262 LED 5907556014053			Number plate LED lamp with cable 0.5 m.	1	0.102	200	59x39x29	20.40	4000	120x80x165	433.00
FT-262 LED QS075 5907556014039			Number plate LED lamp with a cable 0.5 m and a QS075 connector.	1	0.112	200	59x39x29	22.40	4000	120x80x165	473.00
FT-262 LED QS150 5907556014046			Number plate LED lamp with a cable 0.5 m and a QS150 connector.	1	0.116	200	59x39x29	23.20	4000	120x80x165	489.00

Number plate LED lamp

1-functional number plate **LED** lamp – low power consumption
- european **E9** homologation
- ElectroMagnetic Compatibility – **EMC** certificate
- shock-resistance – **PC** lampshade
- optional polarity connection

Lamp functions:
- license number plate light

Technical specification:
- supply voltage: **12–36V DC**
- operating temperature: **–40°C** to **+55°C**
- lamp is resistant to any weather conditions
- lamp is fully airtight

Power consumption:
- license plate light: **12V/24V = 0.08A/0.08A**

Power consumption / Rated power:
- license plate light: **12V/24V = 1W/2W**

EMC E 9

WWW

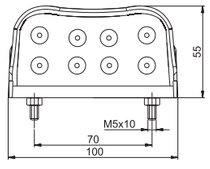

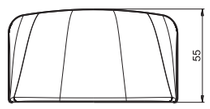

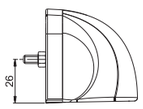

LT LEC

ID/EAN	Photo		Description	Unit pack		Multipack / carton			Multipack / pallet		
				qty.	kg	qty.	cm	kg	qty.	cm	kg
FT-026 LED 5907556002180			Number plate LED lamp without cable.	1	0.11	150	59x39x29	16.50	3000	120x80x165	355.00
FT-026 LED *QS075 5907556005044			Number plate LED lamp with a cable and a QS075 connector.	1	0.15	150	59x39x29	22.50	3000	120x80x165	475.00
FT-026 LED *QS150 5907556005037			Number plate LED lamp with a cable and a QS150 connector.	1	0.15	150	59x39x29	22.50	3000	120x80x165	475.00

* Custom product – lead time will be determined and provided by phone or in writing.

WWW

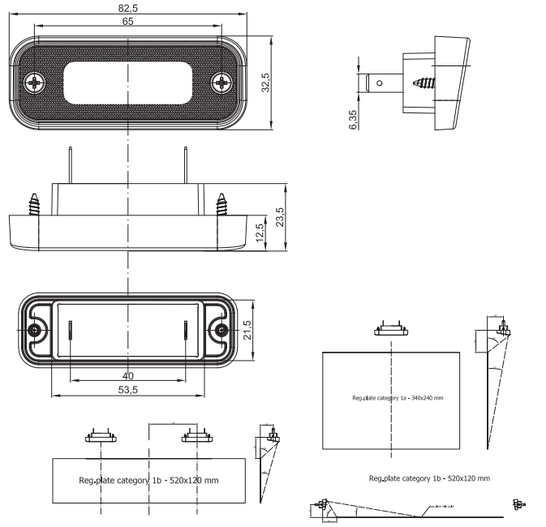

RECESSED
license plate **LAMP**

EMC E 9

1-functional number plate **LED** lamp – low power consumption
European **E9** homologation
ElectroMagnetic Compatibility – **EMC** certificate
Shock-resistance – **PC** lampshade
Optional polarity connection

Lamp functions:
- license number plate light

Technical specification:
- supply voltage: **12–36V DC**
- operating temperature: **–40°C do +55°C**
- lamp is resistant to any weather conditions
- lamp is fully airtight

Power consumption:
- **12V/24V = 0.05A/0.05A**

Power consumption / Rated power:
- **12V/24V = 0.6W/1.2W**

LT LEC

ID/EAN	Photo	Description	Unit pack		Multipack / carton			Multipack / pallet		
			qty.	kg	qty.	cm	kg	qty.	cm	kg
FT-263 LED 5907556015609		Recessed LED license plate lamp, 12-36V without cable, with F1 contacts.	1			59x39x29			120x80x165	

WWW

EMC E 9

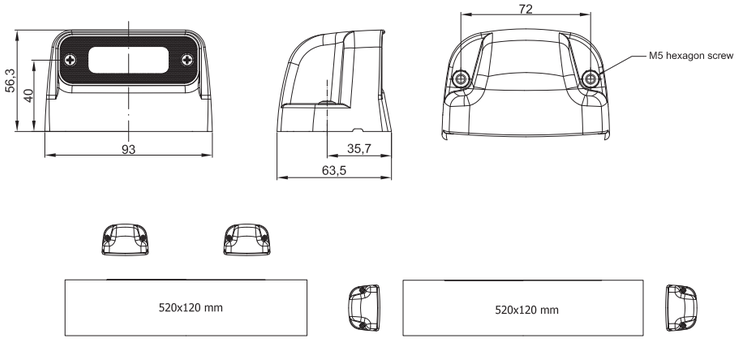

1-functional number plate **LED** lamp – low power consumption
European **E9** homologation
ElectroMagnetic Compatibility – **EMC** certificate
Shock-resistance – **PC** lampshade
Optional polarity connection

Lamp functions:
- license number plate light

Technical specification:
- supply voltage: **12–36V DC**
- operating temperature: **–40°C do +55°C**
- lamp is resistant to any weather conditions
- lamp is fully airtight

Power consumption:
- **12V/24V = 0.05A/0.05A**

Power consumption / Rated power:
- **12V/24V = 0.6W/1.2W**

LT LEC

ID/EAN	Photo	Description	Unit pack		Multipack / carton			Multipack / pallet		
			qty.	kg	qty.	cm	kg	qty.	cm	kg
FT-263/1 LED 5907556016859		LED license plate lamp, 12-36V without cable, with F1 contacts.	1			59x39x29			120x80x165	

Number plate LED lamp

EMC E 9

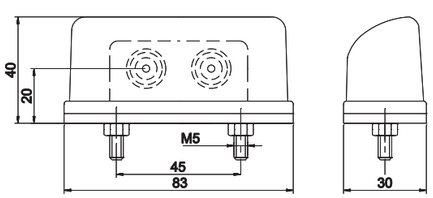

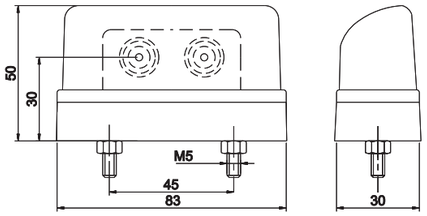

www

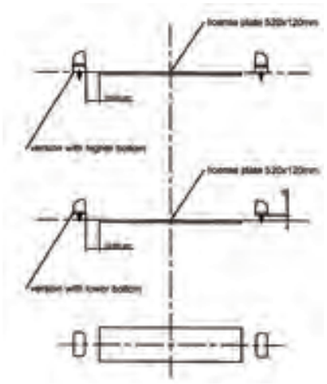

1-functional number plate **LED** lamp – low power consumption
- european **E9** homologation
- ElectroMagnetic Compatibility – **EMC** certificate
- shock-resistance – **PC** lampshade
- optional polarity connection

Lamp functions:
- number plate light

Technical specification:
- supply voltage: **12–36V DC**
- operating temperature: **–40°C** to **+55°C**
- lamp is resistant to any weather conditions
- lamp is fully airtight

Power consumption:
- number plate light:
12V/24V = 0.02A/0.02A

Power consumption / Rated power:
- number plate light:
12V/24V = 0.25W/0.5W

LT SM LEC*

ID/EAN	Photo		Description	Unit pack		Multipack / carton			Multipack / pallet		
				qty.	kg	qty.	cm	kg	qty.	cm	kg
FT-016 LED 5907556001688			Number plate LED lamp with a cable.	2	0.13	400	59x39x29	26.00	8000	120x80x165	545.00
FT-016 LED *QS075 M05 5907556004399			Number plate LED lamp with a cable and a QS075 connector.	2	0.15	400	59x39x29	30.00	8000	120x80x165	625.00
FT-016 LED *QS150 M05 5907556001695			Number plate LED lamp with a cable and a QS150 connector.	2	0.15	400	59x39x29	30.00	8000	120x80x165	625.00
FT-016/1 LED 5907556001701			Number plate LED lamp with a cable.	2	0.15	300	59x39x29	22.50	6000	120x80x165	475.00
FT-016/1 LED *QS075 M05 5907556004405			Number plate LED lamp with a cable and a QS075 connector.	2	0.17	300	59x39x29	25.50	6000	120x80x165	535.00
FT-016/1 LED *QS150 M05 5907556001718			Number plate LED lamp with a cable and a QS150 connector.	2	0.17	300	59x39x29	25.50	6000	120x80x165	535.00

*** Custom product – lead time will be determined and provided by phone or in writing.**

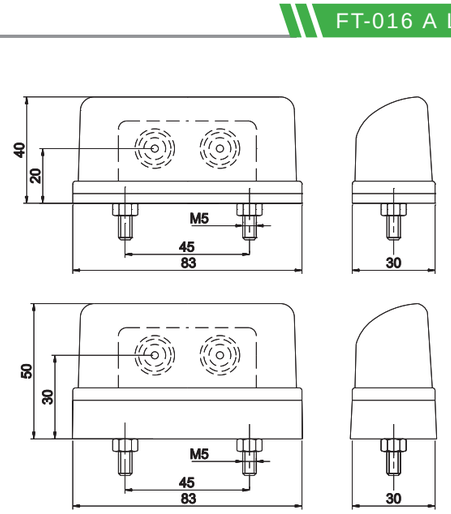

www

EMC E 9

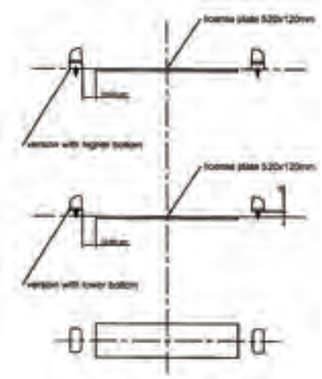

2-functional number plate **LED** lamp – low power consumption
- european **E9** homologation
- ElectroMagnetic Compatibility – **EMC** certificate
- shock-resistance – **PC** lampshade
- optional polarity connection

Lamp functions:
- reversing rear light
- number plate light

Technical specification:
- supply voltage: **12–36V DC**
- operating temperature: **–40°C** to **+55°C**
- lamp is resistant to any weather conditions
- lamp is fully airtight

Power consumption:
- 12V/24V=0.06A/0.06A

Power consumption / Rated power:
- 12V/24V=0.75W/1.5W

LT SM LEC*

ID/EAN	Photo		Description	Unit pack		Multipack / carton			Multipack / pallet		
				qty.	kg	qty.	cm	kg	qty.	cm	kg
FT-016/A LED 5907556006379			Number plate LED lamp with a cable.	2	0.13	400	59x39x29	26.00	8000	120x80x165	545.00
FT-016/1/A LED 5907556006409			Number plate LED lamp with a cable.	2	0.15	300	59x39x29	22.50	6000	120x80x165	475.00

*** Custom product – lead time will be determined and provided by phone or in writing.**

Number plate LED lamp

1-functional number plate **LED** lamp – low power consumption
- european **E9** homologation
- ElectroMagnetic Compatibility – **EMC** certificate
- shock-resistance – **PC** lampshade
- optional polarity connection

Lamp functions:
- license number plate light

Technical specification:
- supply voltage: **12–36V DC**
- operating temperature: **–40°C** to **+55°C**
- lamp is resistant to any weather conditions
- lamp is fully airtight

Power consumption:
- number plate light: **12V/24V = 0.04A/0.04A**

Power consumption / Rated power:
- number plate light: **2V/24V = 0.5W/1W**

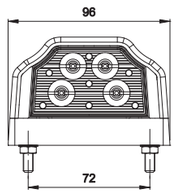

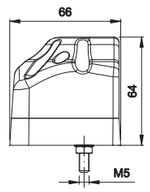

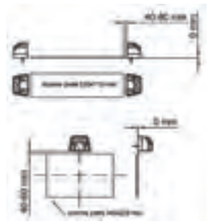

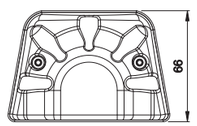

LT LED

ID/EAN	Photo		Description	Unit pack qty.	Unit pack kg	Multipack / carton qty.	Multipack / carton cm	Multipack / carton kg	Multipack / pallet qty.	Multipack / pallet cm	Multipack / pallet kg
FT-031 LED 5907556005396			Number plate LED lamp without cable.	1	0.11	144	59x39x29	15.84	2880	120x80x165	341.80
FT-031 LED *QS075 5907556006614			Number plate LED lamp with a 0.5 m long wiring loom and a QS075 connector.	1	0.15	120	59x39x29	18.00	2400	120x80x165	385.00
FT-031 LED *QS150 5907556006638			Number plate LED lamp with a 0.5 m long wiring loom and a QS150 connector.	1	0.15	120	59x39x29	18.00	2400	120x80x165	385.00

Number plate LED lamp, 2-functional

2-functional number plate **LED** lamp – low power consumption
- european **E9** homologation
- ElectroMagnetic Compatibility – **EMC** certificate
- shock-resistance – **PC** lampshade
- optional polarity connection

Lamp functions:
- reversing rear light
- number plate light

Technical specification:
- supply voltage: **12–36V DC**
- operating temperature: **–40°C** to **+55°C**
- lamp is resistant to any weather conditions
- lamp is fully airtight

Power consumption:
-12V/24V=0.06A/0.06A

Power consumption / Rated power:
-12V/24V=0.75W/1.5W

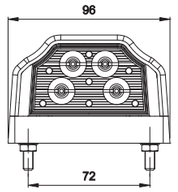

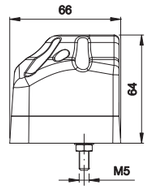

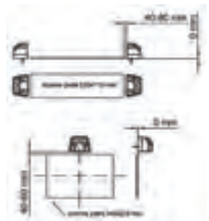

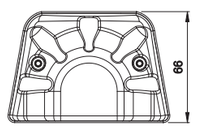

LT SM LED

ID/EAN	Photo		Description	Unit pack qty.	Unit pack kg	Multipack / carton qty.	Multipack / carton cm	Multipack / carton kg	Multipack / pallet qty.	Multipack / pallet cm	Multipack / pallet kg
FT-031 A LED 5907556005402			Number plate LED lamp with a sidelight without cable.	1	0.11	144	59x39x29	15.84	2880	120x80x165	341.80
FT-031 A LED *QS075 5907556006621			Number plate LED lamp with a sidelight, a 0.5 m long wiring loom and a QS075 connector.	1	0.15	120	59x39x29	18.00	2400	120x80x165	385.00
FT-031 A LED *QS150 5907556006645			Number plate LED lamp with a sidelight, a 0.5 m long wiring loom and a QS150 connector.	1	0.15	120	59x39x29	18.00	2400	120x80x165	385.00

Number plate LED lamp

1-functional number plate **LED** lamp – low power consumption
european **E9** homologation
ElectroMagnetic Compatibility – **EMC** certificate
shock-resistance – **PC** lampshade
optional polarity connection

Lamp functions:
- license number plate light

Technical specification:
- supply voltage: **12–36V DC**
- operating temperature: **–40°C** to **+55°C**
- lamp is resistant to any weather conditions
- lamp is fully airtight

Power consumption:
- license plate light: **12V/24V = 0.06A/0.06A**

Power consumption / Rated power:
- license plate light: **12V/24V = 0.8W/1.5W**

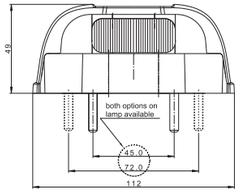

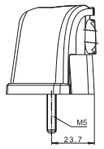

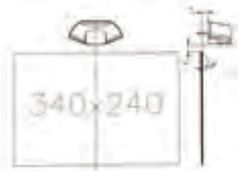

LT LED

ID/EAN	Photo		Description	Unit pack qty.	Unit pack kg	Multipack / carton qty.	Multipack / carton cm	Multipack / carton kg	Multipack / pallet qty.	Multipack / pallet cm	Multipack / pallet kg
FT-260 LED 5907556013919			Number plate LED lamp with cable 0.5 m.	1	0.102	200	59x39x29	20.40	4000	120x80x165	433.00
FT-260 LED QS075 5907556013926			Number plate LED lamp with a cable 0.5 m and a QS075 connector.	1	0.112	200	59x39x29	22.40	4000	120x80x165	473.00
FT-260 LED QS150 5907556013933			Number plate LED lamp with a cable 0.5 m and a QS150 connector.	1	0.116	200	59x39x29	23.20	4000	120x80x165	489.00

Number plate LED lamp

1-functional number plate **LED** lamp – low power consumption
european **E9** homologation
ElectroMagnetic Compatibility – **EMC** certificate
shock-resistance – **PC** lampshade
optional polarity connection

Lamp functions:
- license number plate light

Technical specification:
- supply voltage: **12–36V DC**
- operating temperature: **–40°C** to **+55°C**
- lamp is resistant to any weather conditions
- lamp is fully airtight

Power consumption:
- license plate light: **12V/24V = 0.06A/0.06A**

Power consumption / Rated power:
- license plate light: **12V/24V = 0.8W/1.5W**

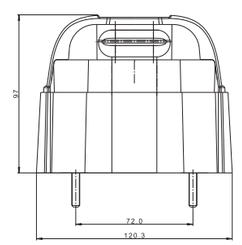

LT SM LED

ID/EAN	Photo		Description	Unit pack qty.	Unit pack kg	Multipack / carton qty.	Multipack / carton cm	Multipack / carton kg	Multipack / pallet qty.	Multipack / pallet cm	Multipack / pallet kg
FT-261 LED 5907556013940			Number plate LED lamp with cable 0.5 m.	1	0.156	100	59x39x29	15.60	2000	120x80x165	337.00
FT-261 LED QS075 5907556013957			Number plate LED lamp with a cable 0.5 m and a QS075 connector.	1	0.166	100	59x39x29	16.60	2000	120x80x165	357.00
FT-261 LED QS150 5907556013964			Number plate LED lamp with a cable 0.5 m and a QS150 connector.	1	0.170	100	59x39x29	17.00	2000	120x80x165	365.00

WWW

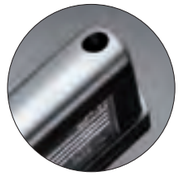

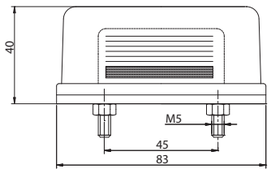

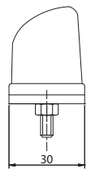

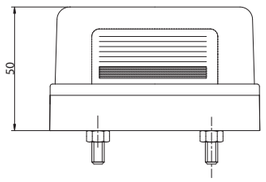

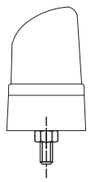

E 9

LT

ID/EAN	Photo	Description	Unit pack		Multipack / carton			Multipack / pallet		
			qty.	kg	qty.	cm	kg	qty.	cm	kg
FT-022 5907556002142		Number plate lamp.	2	0.08	500	59x39x29	20.00	10000	120x80x165	425.00
FT-022/A 5907556002173		Number plate lamp with a sidelight.	2	0.12	500	59x39x29	30.00	10000	120x80x165	625.00
FT-022/1 5907556002159		Number plate lamp with a higher base.	2	0.08	400	59x39x29	16.00	8000	120x80x165	345.00
FT-022/1/A 5907556002166		Number plate lamp with a higher base and a sidelight.	2	0.12	400	59x39x29	24.00	8000	120x80x165	505.00

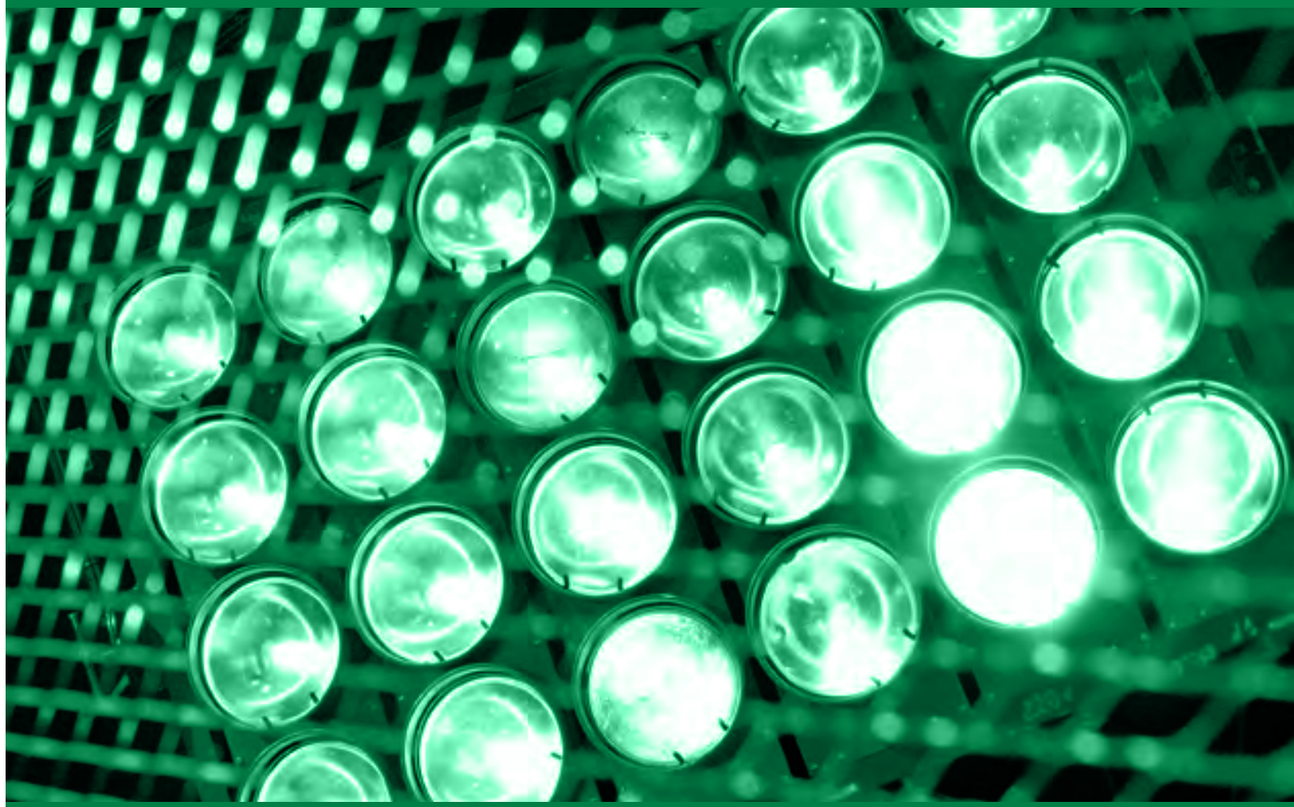

INTERIOR *Lighting*

Interior lighting lamps **perfectly illuminate the interior of any vehicle**. They improve the comfort of travellers during stops and **improve visibility in the vehicle cabin**.

1200 LM

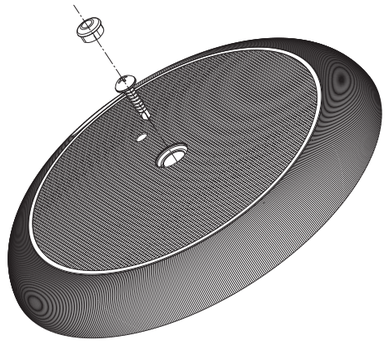

Series of modern interior **LED** type lamps in a round version has become widely used in the energy-saving electrical installations and also in the widely understood automotive industry such as: cabin lights, load beds, horse trailers and caravans. The main advantages of this lamp are extremely high light emission with a natural. Due to its compact size, shock resistance, easy installation and waterproofness the lamp is very appreciated in motorboat industry.
Mounting by means of a self-drilling screw (included).

Technical specification:
- Supply voltage: **12–36 V DC**
- Polarization is not optimal: **(+)** – black wire; **(–)** – white wire
- Power consumption: **12V/24V = 1.0A/0.5A**
- Power consumption (rated power): **12V/24V = 12 Watt**
- Effective (measured) light beam: **1200 lm**
- Operating temperature: **–40°C** to **+55°C**
- Color temperature: **white, neutral; 4000K**

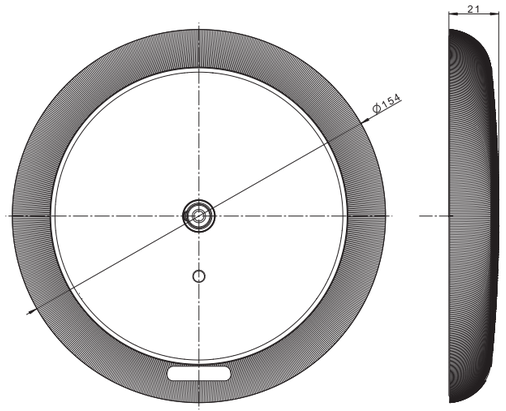

ID/EAN	Photo	Description	Unit pack		Multipack / carton			Multipack / pallet		
			qty.	kg	qty.	cm	kg	qty.	cm	kg
FT-161 LED 5907556015586		LED interior lamp 12-36V, round, white, wire 0.15 m.	1	0.184	89	59x39x29	16.90	1780	120x80x165	363.00

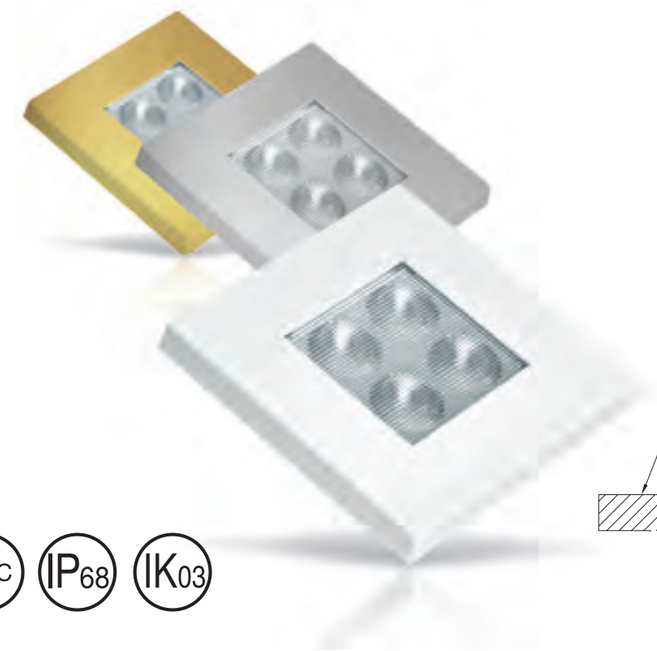

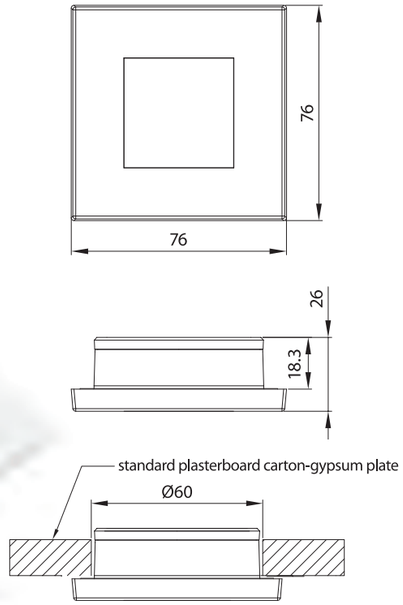

Series of modern interior **LED** type lamps in a square version have become widely used in energy-saving electrical installations and also in the widely understood automotive industry and households. The main features of this lamp include: low power consumption thereby maintaining light efficiency comparable with **20W** halogen bulb; supply possibility with DC voltage and AC voltage – i.e. the possibility to supply with **230W AC** voltage via a transformer.
Due to its small size; shock resistance and easy installation but also due to its waterproofness the lamp is very appreciated in motorboat industry. The lamps are equipped with removable frame type housings. Standard version includes lamps with white, silver and gold frames. There is also a possibility to realize special orders for any housing color.

Technical specification:
- supply voltage: **9–36V (DC or AC)**
- optional polarity connection
- power consumption – **9V/36V = 0.28A/0.08A**
- power consumption (rated power) – **9V/36V = 2.6W**
- light flux: equivalent of the standard **12V–20V bulb**
- operating temperature: **–40°C** to **+55°C**
- color temperature: white/warm, **3500K (Kelvin)**
- effective (measured) light beam: **140 lm**
- full waterproofness (IP68) schock and vibration resistance **(IK03)**
- shock-resistance – **PC** lampshade
- ElectroMagnetic Compatibility – **EMC** certificate
- the product meets legal requirements of the EU and it is marked by **CE**

ID/EAN	Photo	Description	Unit pack		Multipack / carton			Multipack / pallet		
			qty.	kg	qty.	cm	kg	qty.	cm	kg
FT-044 B LED 5907556007161		4-LED interior lamp, square with replaceable frame, white color.	1	0.075	270	59x39x29	20.25	5400	120x80x165	430.00
FT-044 S LED 5907556007178		4-LED interior lamp, square with replaceable frame, silver color.	1	0.075	270	59x39x29	20.25	5400	120x80x165	430.00
FT-044 ZL LED 5907556007185		4-LED interior lamp, square with replaceable frame, gold color.	1	0.075	270	59x39x29	20.25	5400	120x80x165	430.00

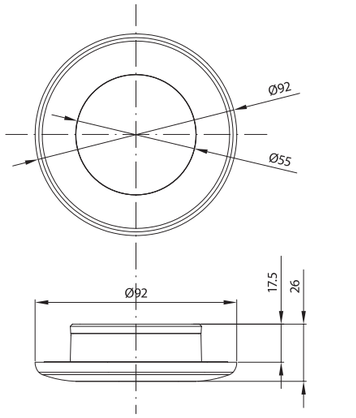

WWW

IP68 IK03

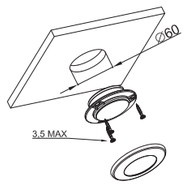

Series of modern interior **LED** type lamps in a round version have become widely used in energy-saving electrical installations and also in the widely understood automotive industry and households. The main features of this lamp include: low power consumption thereby maintaining light efficiency comparable with **35W** halogen bulb; supply possibility with DC voltage and AC voltage – i.e. the possibility to supply with **230W AC** voltage via a transformer.
Due to its small size; shock resistance and easy installation but also due to its waterproofness the lamp is very appreciated in motorboat industry. The lamps are eqquiped with removable frame type housings. Standard version includes lamps with white, silver and gold frames. There is also a possibility to realize special orders for any housing color.

Technical specification:
- supply voltage: **12–36V** (DC or AC)
- optional polarity connection
- power consumption – **12V/36V = 0.38A/0.14A**
- power consumption (rated power) – **12V/36V = 5 Watt**
- effective (measured) light beam – **420 lm**
- light flux: equivalent of the standard **12V–35V bulb**
- operating temperature: **–40°C** to **+55°C**
- color temperature: white/warm, **4000K** (Kelvin)

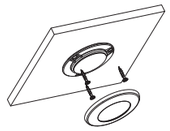

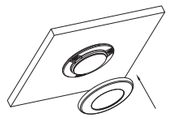

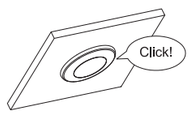

LED

ID/EAN	Photo	Description	Unit pack		Multipack / carton			Multipack / pallet		
			qty.	kg	qty.	cm	kg	qty.	cm	kg
FT-046 B LED 590755600534	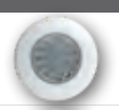	21-LED interior lamp, round with replaceable frame, white color.	1	0.085	216	59x39x29	18.36	4320	120x80x165	392.20
FT-046 S LED 5907556005358		21-LED interior lamp, round with replaceable frame, silver color.	1	0.085	216	59x39x29	18.36	4320	120x80x165	392.20

WWW

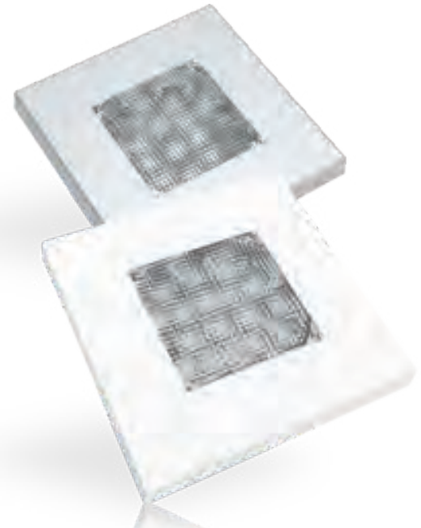

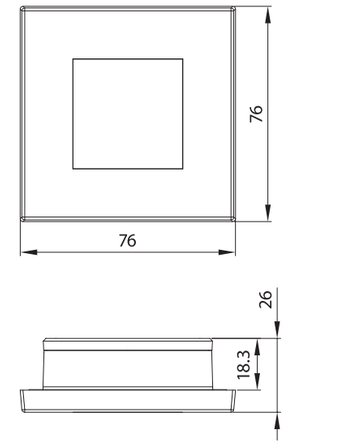

IP68 IK03

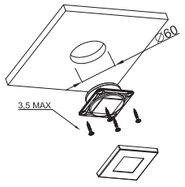

Series of modern interior **LED** type lamps in a square version have become widely used in energy-saving electrical installations and also in the widely understood automotive industry and households. The main features of this lamp include: low power consumption thereby maintaining light efficiency comparable with **35W** halogen bulb; supply possibility with DC voltage and AC voltage – i.e. the possibility to supply with **230W AC** voltage via a transformer.
Due to its small size; shock resistance and easy installation but also due to its waterproofness the lamp is very appreciated in motorboat industry. The lamps are equipped with removable frame type housings. Standard version includes lamps with white, silver and gold frames. There is also a possibility to realize special orders for any housing color.

Technical specification:
- supply voltage: **12–36V** (DC or AC)
- optional polarity connection
- power consumption – **12V/36V = 0.38A/0.14A**
- power consumption (rated power) – **12V/36V = 5W**
- effective (measured) light beam – **340 lm**
- light flux: equivalent of the standard **12V–35V bulb**
- operating temperature: **–40°C** to **+55°C**
- color temperature: white/warm, **4000K** (Kelvin)

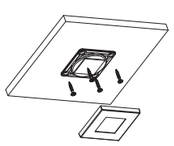

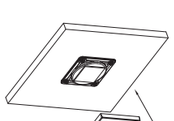

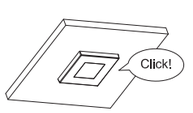

LED

ID/EAN	Photo	Description	Unit pack		Multipack / carton			Multipack / pallet		
			qty.	kg	qty.	cm	kg	qty.	cm	kg
FT-047 B LED 5907556005372		21-LED interior lamp, square with replaceable frame, white color.	1	0.075	270	59x39x29	20.25	5400	120x80x165	430.00
FT-047 S LED 5907556005389		21-LED interior lamp, square with replaceable frame, silver color.	1	0.075	270	59x39x29	20.25	5400	120x80x165	430.00

FT-160 CZ LED

FT-160 B LED

EMC E9

Series of modern interior **LED** type lamps in a round version has become widely used in the energy-saving electrical installations and also in the widely understood automotive industry such as: cabin lights, load beds, horse trailers and caravans. The major advantages of the lamp are universal supply voltage and low power consumption that go with the high light emission. Due to its compact size, shock resistance, easy installation and waterproofness the lamp is very appreciated in motorboat industry.
The lamps are available in two versions: black and white.

Technical specification:
- Supply voltage: **12–36 V DC**
- Polarization is optional
- Power consumption: **12V/24V/36V = 0,4A/0.2A/0.14A**
- Power consumption (rated power): **12V–36V=5 Watt**
- Effective (measured) light beam: **420 lm**
- Operating temperature: **–40°C** to **+55°C**
- Color temperature: white, neutral; **4000K**
- PC lampshade made with a very durable material

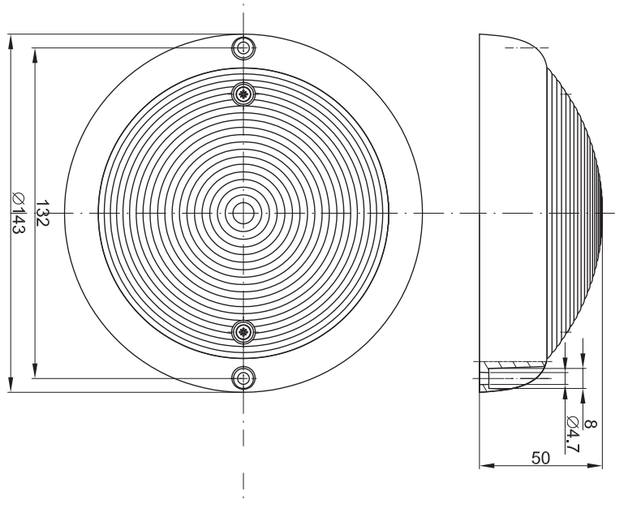

LED

ID/EAN	Photo	Description	Unit pack		Multipack / carton			Multipack / pallet		
			qty.	kg	qty.	cm	kg	qty.	cm	kg
FT-160 B LED 5907556003057		LED interior lamp 12-36V, round, white; without light switch.	1	0.146	64	59x39x29	9.34	1300	120x80x165	214.80
FT-160 CZ LED 5907556003101		LED interior lamp 12-36V, round, black; without light switch.	1	0.146	64	59x39x29	9.34	1300	120x80x165	214.80

WWW

FT-160 CZ W LED

FT-160 B W LED

EMC E9

Series of modern interior **LED** type lamps in a round version has become widely used in the energy-saving electrical installations and also in the widely understood automotive industry such as: cabin lights, load beds, horse trailers and caravans. The lamp has been also equipped with the switch light that enables the product to operate in two modes of intensity: **I=25%; II=100%**. The major advantages of the lamp are universal supply voltage and low power consumption that go with the high light emission. Due to its compact size, shock resistance, easy installation and waterproofness the lamp is very appreciated in motorboat industry.
The lamps are available in two versions: black and white.

Technical specification:
- Supply voltage: **12–36 V DC**
- Polarization is not optional
- Power consumption: **I mode: 12V/24V/36V = 0.08A/0.05A/0.04A; II mode: 12V/24V/36V = 0.4A/0.2A/0.14A**
- Power consumption (rated power): **I mode: 12V–36V=1.2 Watt; II mode: 12V–36V=5 Watt**
- Effective (measured) light beam: **I mode: 110 lm; II mode: 400 lm**
- Operating temperature: **–40°C** to **+55°C**
- Color temperature: white, neutral; **4000K**
- **PC** lampshade made with a very durable material

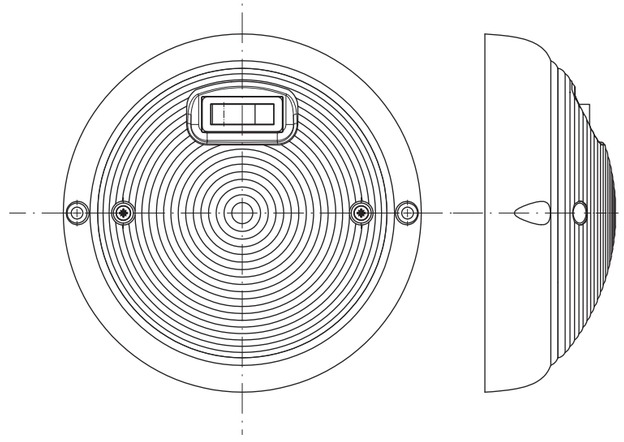

LED

ID/EAN	Photo	Description	Unit pack		Multipack / carton			Multipack / pallet		
			qty.	kg	qty.	cm	kg	qty.	cm	kg
FT-160 B W LED 5907556003064		LED interior lamp 12-36V, round, white; with light switch.	1	0.158	64	59x39x29	10.11	1300	120x80x165	230.40
FT-160 CZ W LED 5907556003118		LED interior lamp 12-36V, round, black; with light switch.	1	0.158	64	59x39x29	10.11	1300	120x80x165	230.40

INDICATORS

The purpose of indicators is to **inform** other road users about **the planned change of direction or lane**. Early signalling of a change of direction **allows other road users to react appropriately and be prepared for possible hazards**.

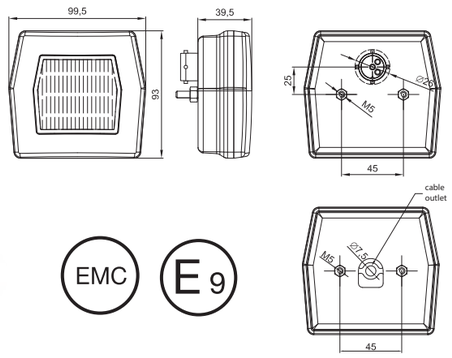

WWW VIDEO

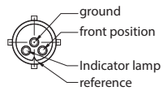

EMC E 9

2-functional universal **LED** headlamp-low power consumption
- european **E9** homologation
- the lamp is homologated to be mounted horizontally and vertically as well
- ElectroMagnetic Compatibility – **EMC** certificate
- shock-resistance – **PC** lampshade
- reverse polarity protection system

Lamp functions:
- front position light
- front indicator light; CAT-1

Technical specification:
- supply voltage: **12–36V DC**
- operating temperature: **–40°C** to **+55°C**
- lamp is resistant to any weather conditions
- lamp is fully airtight

Power consumption:
- position light: **12V/24V = 0.13A/0.13A**
- indicator: **12V/24V = 0.2A/0.1A**

Power consumption (rated power):
- position light: **12V/24V = 1.6W/3.2W**
- indicator: **12V/24V = 2.5W/2.5W**

ID/EAN	Photo	Description	Unit pack		Multipack / carton			Multipack / pallet		
			qty.	kg	qty.	cm	kg	qty.	cm	kg
FT-125 LED 5907556009240		FT-125 LED Universal headlamp, 12-36V, 2-functional with position light and indicator CAT-1, 1m cable.	1	0.25		59x39x29			120x80x165	
FT-125 LED BAJONET 5907556009257		Universal headlamp, 12-36V, 2-functional with position light and indicator CAT-1, Bayonet connector.	1	0.20		59x39x29			120x80x165	

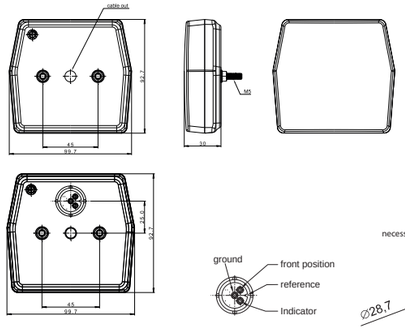

WWW VIDEO

EMC E 9

Universal **LED** headlamp-low power consumption
- european **E9** homologation
- ElectroMagnetic Compatibility – **EMC** certificate
- shock-resistance – **PC** lampshade
- reverse polarity protection system

Lamp functions:
- front position light
- front indicator light

Technical specification:
- supply voltage: **12–15V DC**
- operating temperature: **–40°C** to **+55°C**
- lamp is resistant to any weather conditions
- lamp is fully airtight

Power consumption:
- position light: **2V = 0.1A**
- indicator: **12V = 0.2A**

Power consumption (rated power):
- position light: **12V = 1.2W**
- indicator: **12V = 2.4W**

ID/EAN	Photo	Description	Unit pack		Multipack / carton			Multipack / pallet		
			qty.	kg	qty.	cm	kg	qty.	cm	kg
FT-225 LED 5907556015265		Universal LED front lamp 12V, 2-functional POSITIONAL/INDICATOR, 1 m cable.	1	0.190	144	59x39x29	27.36	2880	120x80x165	572.20
FT-225 LED BAJONET 5907556015272		Universal LED front lamp 12V, 2-functional POSITIONAL/INDICATOR, 5PIN Bayonet connector.	1	0.160	144	59x39x29	23.04	2880	120x80x165	485.80

WWW

ID/EAN	Photo	Description	Unit pack		Multipack / carton			Multipack / pallet		
			qty.	kg	qty.	cm	kg	qty.	cm	kg
DOB-040 Z		Yellow indicator lamp, front (DAF-F95, DAF, MAN, STAR 742, 1142) with a bulb holder.	1	0.21						
DOB-040 B		White indicator lamp, front (DAF-F95, DAF, MAN, STAR 742, 1142) with a bulb holder.	1	0.21						

REFLECTORS

Conspicuity marking has a **very significant impact on road safety**.
It improves visibility on the road and allows to determine actual vehicle's dimensions and its location – when on the roadside**, when entering the traffic and during manoeuvring.**

Reflector

WWW

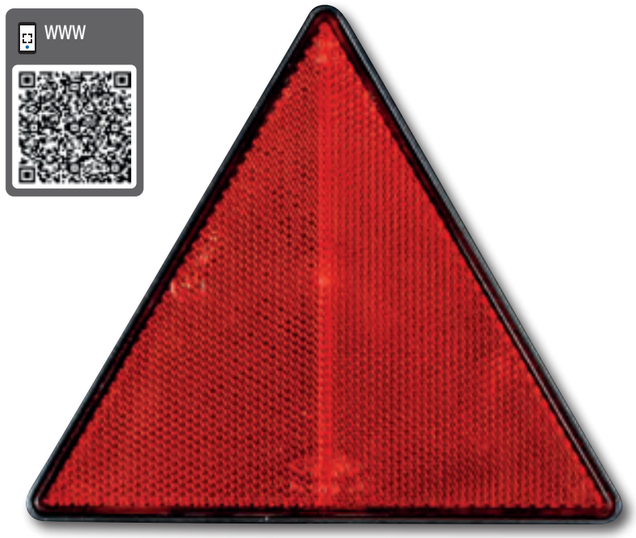

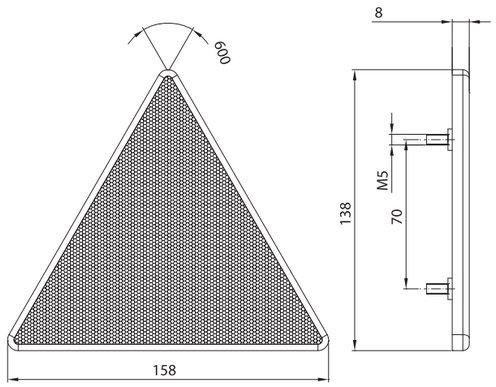

E20

CAT

ID	Photo	Description	Unit pack		Multipack / carton			Multipack / pallet		
			qty.	kg	qty.	cm	kg	qty.	cm	kg
DOB-030A		Triangular reflector with screws.	2	0.16	150	59x39x29	12.00	3000	120x80x165	265.00

Reflector

WWW

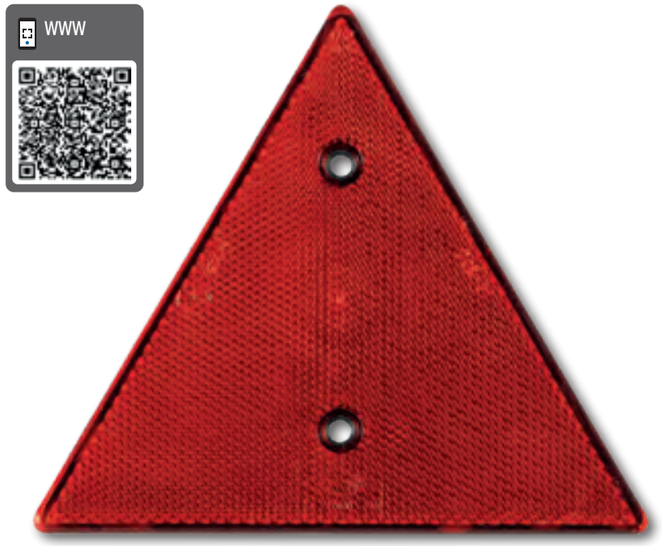

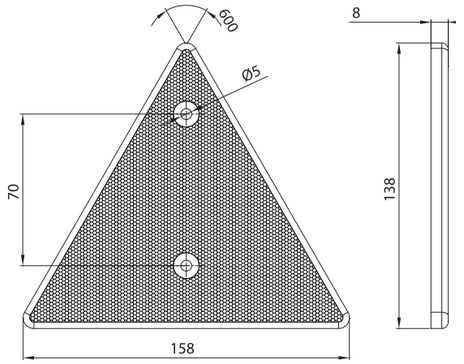

E20

CAT

ID	Photo	Description	Unit pack		Multipack / carton			Multipack / pallet		
			qty.	kg	qty.	cm	kg	qty.	cm	kg
DOB-031		Triangular reflector with 2 mounting holes.	2	0.12	450	59x39x29	27.00	9000	120x80x165	565.00

Rectangular reflector

WWW

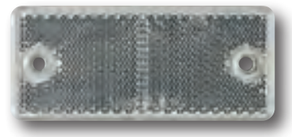

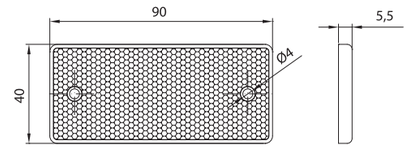

E20

CAT

ID	Photo	Description	Unit pack		Multipack / carton			Multipack / pallet		
			qty.	kg	qty.	cm	kg	qty.	cm	kg
DOB-034 B		White rectangular reflector with 2 mounting holes.	10	0.20	2100	59x39x29	42.00	42000	120x80x165	865.00
DOB-034 Z		Yellow rectangular reflector with 2 mounting holes.	10	0.20	2100	59x39x29	42.00	42000	120x80x165	865.00
DOB-034 C		Red rectangular reflector with 2 mounting holes.	10	0.20	2100	59x39x29	42.00	42000	120x80x165	865.00

Rectangular reflector

WWW

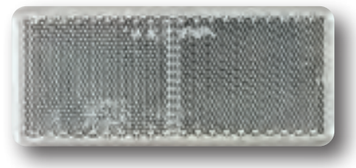

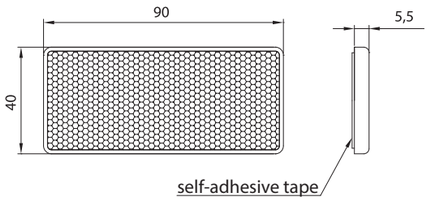

E20

CAT

ID	Photo	Description	Unit pack		Multipack / carton			Multipack / pallet		
			qty.	kg	qty.	cm	kg	qty.	cm	kg
DOB-035 B		White rectangular reflector mounted with adhesive tape.	10	0.20	2500	59x39x29	50.00	42000	120x80x165	865.00
DOB-035 Z	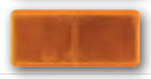	Yellow rectangular reflector mounted with adhesive tape.	10	0.20	2500	59x39x29	50.00	42000	120x80x165	865.00
DOB-035 C		Red rectangular reflector mounted with adhesive tape.	10	0.20	2500	59x39x29	50.00	42000	120x80x165	865.00

DOB-039 — Round reflector

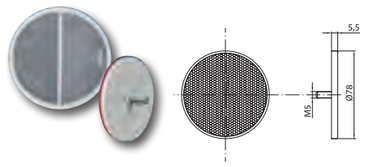

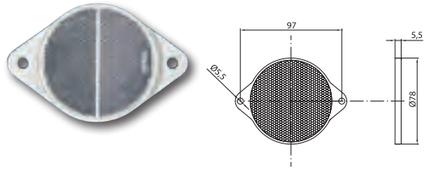

WWW

ID	Photo	Description	Unit pack		Multipack / carton			Multipack / pallet		
			qty.	kg	qty.	cm	kg	qty.	cm	kg
DOB-039A B		White round reflector on a backing with a screw.	10	0.07						
DOB-039A Z		Yellow round reflector on a backing with a screw.	10	0.07						
DOB-039A C		Red round reflector on a backing with a screw.	10	0.07						
DOB-039 B		White round reflector mounted with 2 screws.	10	0.37						
DOB-039 Z		Yellow round reflector mounted with 2 screws.	10	0.37						
DOB-039 C		Red round reflector mounted with 2 screws.	10	0.37						

DOB-032 — Round reflector

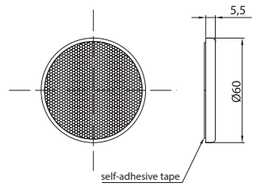

WWW

ID	Photo	Description	Unit pack		Multipack / carton			Multipack / pallet		
			qty.	kg	qty.	cm	kg	qty.	cm	kg
DOB-032 B		White round reflector mounted with adhesive tape.	10	0.15						
DOB-032 Z		Yellow round reflector mounted with adhesive tape.	10	0.15						
DOB-032 C		Red round reflector mounted with adhesive tape.	10	0.15						

DOB-033 — Round reflector

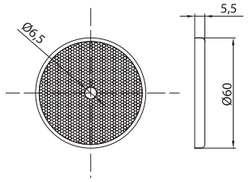

WWW

ID	Photo	Description	Unit pack		Multipack / carton			Multipack / pallet		
			qty.	kg	qty.	cm	kg	qty.	cm	kg
DOB-033 B		White round reflector with a mounting hole.	10	0.14						
DOB-033 Z		Yellow round reflector with a mounting hole.	10	0.14						
DOB-033 C		Red round reflector with a mounting hole.	10	0.14						

Rectangular reflector — DOB-42

WWW

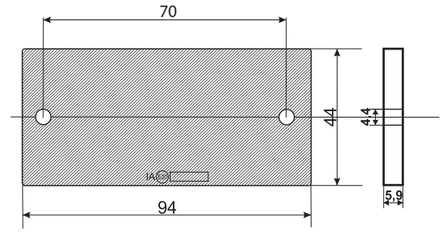

ID	Photo	Description	Unit pack		Multipack / carton			Multipack / pallet		
			qty.	kg	qty.	cm	kg	qty.	cm	kg
DOB-42 B		White rectangular reflector 94x44 mm with 2 mounting holes.	10	0.23						
DOB-42 Z		Yellow rectangular reflector 94x44 mm with 2 mounting holes.	10	0.23						
DOB-42 C		Red rectangular reflector 94x44 mm with 2 mounting holes.	10	0.23						
DOB-42A B		White rectangular reflector 94x44 mm with 2 mounting holes, mounted with adhesive tape.	10	0.23						
DOB-42A Z		Yellow rectangular reflector 94x44 mm with 2 mounting holes, mounted with adhesive tape.	10	0.23						
DOB-42A C		Red rectangular reflector 94x44 mm with 2 mounting holes, mounted with adhesive tape.	10	0.23						

Rectangular reflector — DOB-43

WWW

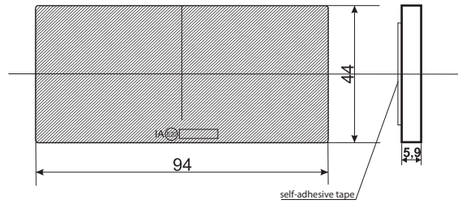

ID	Photo	Description	Unit pack		Multipack / carton			Multipack / pallet		
			qty.	kg	qty.	cm	kg	qty.	cm	kg
DOB-43 B		Withe rectangular reflector 94x44 mm, mounted with adhesive tape.	10	0.24						
DOB-43 Z		Yellow rectangular reflector 94x44 mm, mounted with adhesive tape.	10	0.24						
DOB-43 C		Red rectangular reflector 94x44 mm, mounted with adhesive tape.	10	0.24						

ACCESSORIES

Our offer**, in addition to lamps and cable harnesses,** includes a variety of accessories**.**

LED CONTROL BOX ALU 13 12V

WWW

All dimensions are presented in mm

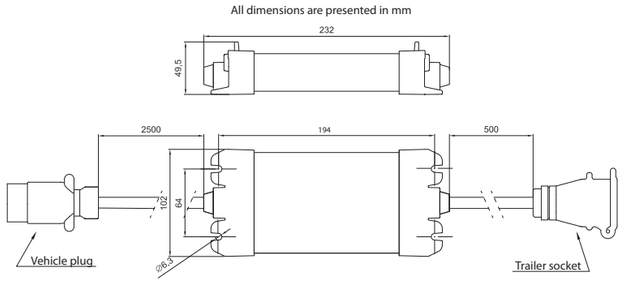

LED CONTROL BOX ALU 7 12V

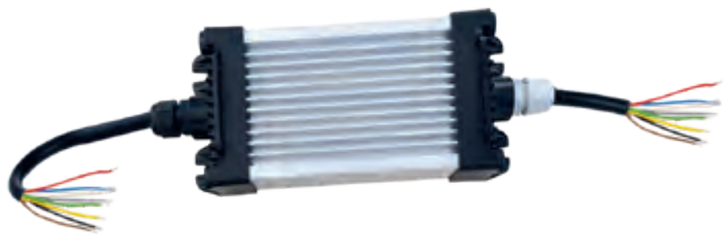

LED CONTROL BOX ALU 12V BW

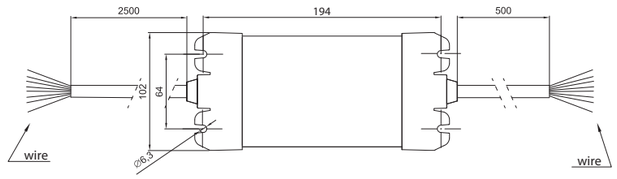

ID/EAN	Photo	Description	Unit pack		Multipack / carton			Multipack / pallet		
			qty.	kg	qty.	cm	kg	qty.	cm	kg
QS075 z przewodem 2x0.75		Connector for a 2x0.75 mm² cable (fast assembly); Available cable lengths: M05=0.5 m; M10=1 m; M15=1.5 m.	10	0.50						
QS150 z przewodem 2x0.75		Connector for a 2x1.5 mm² cable (fast assembly); Available cable lengths: M05=0.5 m; M10=1 m; M15=1.5 m.	10	0.50						
QS075/QS075 5907556007086		Electrical connector, QS075<->QS075 adapter.	10	0.15						
QS075/QS150 5907556007109		Electrical connector, QS075<->QS150 adapter.	10	0.18						
QS150/QS150 5907556007093		Electrical connector, QS150<->QS150 adapter.	10	0.21						
STYK FT-010 / FT-011 100 5907556007079		FT-010 / FT-011 clearance lamp contact, pack of 100 pcs.	100	0.24						
KLIN SET 5907556007055		Car wheel wedge with a mounting holder.	1	0.35						
TRZPIEŃ 1 5907556011137		Pole Mount 1 for Beacons with the thread and 0.11 m loom. I	1	0.220						
TRZPIEŃ 2 5907556011144		Pole Mount 2 for Beacons with a 0.11 m loom. T	1	0.268						
TRZPIEŃ 3 5907556011151		Pole Mount 3 for Beacons with a 0.11 m loom. L	1	0.368						
TRZPIEŃ 4 5907556011168		Pole Mount 4 for Beacons with a 0.11 m loom. U	1	0.362						
Uchwyt „OMEGA” 5907556006010		OMEGA mounting holder of galvanized metal sheet (**FT-036** lamps).	10	0.60						
Uchwyt „OMEGA” INOX 5907556005600		OMEGA mounting holder of INOX metal sheet (**FT-036** lamps).	10	0.45						
MAG FT-036 5907556007062		Magnetic base for **FT-036** lamp with a rubber cover.	1	0.45						

ID/EAN	Photo	Description	Unit pack		Multipack / carton			Multipack / pallet		
			qty.	kg	qty.	cm	kg	qty.	cm	kg
LGY 2x0.75 5907556003675	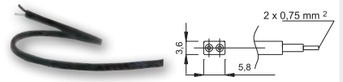	Rectangular 2x0.75 mm² cable.	100m	3.70						
LGY 2x150 5907556003668	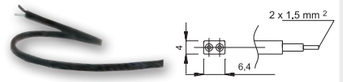	Rectangular 2x1.5 mm² cable.	100m	5.30						
KAT FT-004 5907556007048		**FT-004** clearance lamp angle holder.	10	0.20						
KAT MD-013 5907556007031		**MD-013** clearance lamp angle holder.	10	0.20						
KAT FT-017/FT-018 5907556002678		Universal angle holder (**FT-017, FT-018**).	10	0.25						
KAT FT-019 5907556005587		**FT-019** clearance lamp angle holder.	10	0.20						
KAT FT-020 5907556005594		**FT-020** clearance lamp angle holder.	10	0.20						
WTY BAJONET L M10 5907556007116		Bayonet plug (5 PIN) with a 5x0.5 mm² cable, 1 m long, yellow.	1	0.017						
WTY BAJONET P M10 5907556007123		Bayonet plug (5 PIN) with a 5x0.5 mm² cable, 1 m long, green.	1	0.017						
WTY AMP 7PIN M10 5907556006737		AMP plug (7 PIN) with a 6x0.75 mm² cable, 1 m long.	1	0.017						
WTY DS M05 5907556008038		Deutsch Stecker plug with a 2x0.75 mm², 0.5 cable long.	1	0.022						
KUWETA WARSZTATOWA	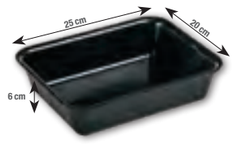	Storage bin, plastic, black, bulk pack (5 pcs.).	5	0.24						

ID/EAN	Photo	Description	Unit pack		Multipack / carton			Multipack / pallet		
			qty.	kg	qty.	cm	kg	qty.	cm	kg
WTY 7PIN		7PIN plastic plug, 12V.	1	0.085						
WTY GNIAZDO 7PIN		7PIN socket, 12V with a rubber gasket.	1	0.10						
WTY 13PIN		13PIN plastic plug PA6, chrome pins, 12V.	1	0.085						
WTY GNIAZDO 13PIN		13PIN socket, 12V with a rubber gasket.	1	0.10						
WTY ADAPTER 7PIN/ 13PIN		Conversion adaptor, towing socket 7PIN ->13PIN.	1	0.08						
WTY ADAPTER 13PIN/ 7PIN		Conversion adapter, towing socket 13PIN ->7PIN.	1	0.08						
XXI 1 – BAJ-005-005 5907556008984		Connecting cable for BAYONET lamps (1+1 option).	1	0.11						
XXI 2 – BAJ-005-005 5907556008991		Connecting cable for BAYONET lamps (2+1 option).	1	0.14						
XXI 3 | – BAJ-005-005 5907556009004		Connecting cable for BAYONET lamps (3+1 option).	1	0.18						
LED CONTROL BOX ALU 13 12V 5907556012837		Electronic module presented in an aluminium housing with 13 PIN socket, plug and 2.5 m cable. The product enables the proper LED lighting solutions cooperation with 12V installations.	1	1.780						
LED CONTROL BOX ALU 7 12V 5907556012844		Electronic module presented in an aluminium housing with 7 PIN socket, plug and 2.5 m cable. The product enables the proper LED lighting solutions cooperation with 12V installations.	1	1.704						
LED CONTROL BOX ALU 12V BW 5907556012820		Electronic module in an aluminium housing that enables the proper LED lighting solutons cooperation with 12V installations with wire lenght 2.5 m.	1	1.580						

PRODUCT NAME	PAGE
549	79
551	78
DOB-030A	180
DOB-031	180
DOB-032	182
DOB-033	182
DOB-034	181
DOB-035	181
DOB-039	182
DOB-040	177
DOB-050	158
DOB-051	151
DOB-42	183
DOB-43	183
FT-001	141-143
FT-001 B LED	134-135
FT-001 C LED	138-139
FT-001 Z LED	136-137
FT-004 K LED	131
FT-004 LED	130
FT-006	141
FT-007	80
FT-009 LED	132-133
FT-012 LED	122
FT-013 K LED	127
FT-013 LED	126
FT-015 K LED	125
FT-015 LED	124
FT-016 A LED	163
FT-016 LED	162
FT-017 K LED	116
FT-017 LED	115
FT-018 LED	117
FT-019 K LED	119
FT-019 LED	118
FT-020 K LED	121
FT-020 LED	120
FT-022	166
FT-025 LED	140
FT-026 LED	160
FT-027 LED	112
FT-031 A LED	164
FT-031 LED	164
FT-036 LED	30-31
FT-036 LED ALU 2800	28-29
FT-036 REV LED	148
FT-038 CB LED	110
FT-038 LED	111

PRODUCT NAME	PAGE
FT-044 LED	169
FT-045 LED	114
FT-046 LED	170
FT-047 LED	171
FT-060 LED	106-107
FT-061 LED	94
FT-061 K LED	95
FT-063 LED	32-33
FT-064 LED	34-35
FT-069 LED	92
FT-070 LED	100-101
FT-071 LED	99
FT-072 LED	93
FT-073 LED	90
FT-073 LED LONG	91
FT-074 LED	89
FT-075 LED	102-103
FT-076 LED	105
FT-077	75
FT-080 LED	104
FT-088	76
FT-089	77
FT-090 LED	113
FT-092 LED	140
FT-101 LED	20-21
FT-110 LED	72
FT-111 LED	156
FT-112 LED	149
FT-113 Y LED	73
FT-120 LED	68-69
FT-120 T LED	70-71
FT-121 LED	68-69
FT-121 T LED	70-71
FT-122 LED	68-69
FT-122 T LED	70-71
FT-123 LED	157
FT-124 LED	150
FT-125 LED	176
FT-130 LED	64-65
FT-140 LED	108-109
FT-141 LED	96
FT-141 A LED	96
FT-145 LED	97
FT-146 LED	88
FT-150 LED	16-17
FT-150 DF N LED	18-19
FT-160 LED	172-173
FT-161 LED	168

PRODUCT NAME	PAGE
FT-170 LED	60-63
FT-190 LED	85
FT-195 LED	98
FT-200 LED	15
FT-200 N LED	14
FT-210 LED	13
FT-210 N LED	13
FT-213 LED	46
FT-214 LED	146, 154
FT-222 LED	66
FT-223 LED	157
FT-224 LED	150
FT-225 LED	176
FT-230 LED	48-49
FT-260 LED	165
FT-261 LED	165
FT-262 LED	160
FT-263 LED	161
FT-263/1 LED	161
FT-270 LED	50-51
FT-277 LED	42-43
FT-300 LED	37
FT-320 LED	47
FT-360 LED	26
FT-361 LED	27
FT-370 LED	52-53
FT-400 LED	155
FT-410 LED	147
FT-500 LED	56-59
FT-600/610 LED	44-45
FT-700 LED	40-41
KAT FT-004	187
KAT FT-017/FT-018	187
KAT FT-019	187
KAT FT-020	187
KAT MD-013	187
KLIN SET	186
KUWETA WARSZTATOWA	187
LED CONTROL BOX ALU 13 12V	188
LED CONTROL BOX ALU 7 12V	188
LED CONTROL BOX ALU 12V BW	188
LGY 2x0,75	187
LGY 2x150	187
MAG FT-036	186
MD-002	81
MD-013 K LED	129
MD-013 LED	128

PRODUCT NAME	PAGE
MD-016	80
MD-035	158
MD-040	151
Osłona lampy MAŁA	82
Osłona lampy DUŻA	83
QS075 z przewodem 2x0,75	186
QS075/QS075	186
QS075/QS150	186
QS150 z przewodem 2x0,75	186
QS150/QS150	186
STYK FT-010 /FT-011 100	186
TRZPIEŃ 1	186
TRZPIEŃ 2	186
TRZPIEŃ 3	186
TRZPIEŃ 4	186
Uchwyt „OMEGA”	186
Uchwyt „OMEGA” INOX	186
WTY 13PIN	188
WTY 7PIN	188
WTY ADAPTER 13PIN/ 7PIN	188
WTY ADAPTER 7PIN/ 13PIN	188
WTY AMP 7PIN M10	187
WTY BAJONET L M10	187
WTY BAJONET P M10	187
WTY DS M05	187
WTY GNIAZDO 13PIN	188
WTY GNIAZDO 7PIN	188
XXI 1 – BAJ-005-005	188
XXI 2 – BAJ-005-005	188
XXI 3 – BAJ-005-005	188

www.fristom.com

ISO 9001

UCA
unidad de certificación
DEL AUTOMÓVIL